Ducted Split
Wine Cellar Cooling Systems

Installation, Operation and Maintenance Guide
SS025, SS050, SS088, SS200

Manufactured by:

AiR INNOVATIONS Syracuse, NY
www.wineguardian.com www.airinnovations.com

Wine Guardian reserves the right, without notice, to make changes to this document at its sole discretion.
Please visit our web site for the most current version of the Wine Guardian manual and other literature.
Wine Guardian is a registered trademark (2,972,262) of Air Innovations, Inc.
Edition 4-2017

© Air Innovations, 2017

Part No. 15H0128-00

Table of Contents

Directory of Terms 1
Illustrations 2
Receiving, Inspecting and Unpacking the Wine Guardian Unit 3
- Review the Packing Slip to Verify 3
- Check the fan coil unit for: 3
- Check the condensing unit for 3

General Description 4
- The Wine Guardian Ducted Split System Contains 4
- Wine Guardian Fan Coil Unit 5
- Electrical Controls 5
- Condensing Unit 5
- Accessories and Optional Equipment 6
- Heating Coils 6
- Duct Collars and Flexible Ducts 6
- Extended Compressor Warranty 6
- Low Ambient Option 6
- Condensate Pump 6
- Humidifier 6
- Overview of the Wine Guardian fan coil 7
- Ducted split system specifications sheet 9
- Wiring Diagram for SS025 10
- Wiring Diagram for SS088 Units 11
- Wiring Diagram for SS200 Units 12
- 24-Volt Contactor Detail Sheet 13
- Condensing Section Wiring Schematics 17

Safety 18
- Safety Message Conventions 18
- Danger 18
- Warning 18
- Caution 18
- Lockout/Tagout Procedure 19
- Safety Considerations 19
- Safety Hazards 19
- Electrical Hazards 19
- Electrical Shock Hazards 19
- Hot Parts Hazards 19
- Moving Parts Hazards 19
- Equipment Safety Interlocks 20
- Main Power Switch 20

Installation 22
- Pre-installation Test 22
- Air Flow Diagram 22

Planning the Installation 24
Addressing Items in the Planning Process 24
Performing a Pre-installation Check 24
Installing the Fan Coil Unit 25
Floor Mounting 25
Wall Mounting 25
Ceiling Mounting 26
Typical Mounting Arrangements 26
Handling and Installation 26
Floor Mount 26
Rod Mount 27
Shelf Mount 27
Optional ductwork connection on same wall Fig. 4 27
Installing the Ductwork and Grilles 28
Duct Collars 28
Location of Supply and Return Grilles 28
General Duct Recommendation 29
Reducing Noise from the Unit 29
Installing the Condensate Drain Connection 30
Installing the Drain Line 30
Priming the Drain Trap 30
Wiring the Fan Coil Unit for Power 31
Installing the Condensing Unit 32
Installation of Interconnecting Refrigerant Lines (Suction and Liquid) 32
Split System Interconnecting Line Sizing Chart 33
Sample Piping Configurations 34
Leak Checking and Evacuation Process 35
Wiring 35
Refrigerant Charging 36
Determining the amount of charge 36
Procedures for Charging System with Head Pressure Control 37
Superheat 38
Sub-Cooling 38
Split System Operations Chart 39
Installing the Remote interface controller and Communication Cable 40
Mounting the Remote Interface Controller 40
Installing the Wine Guardian Remote Sensor 42
Mounting the Remote Sensor 42
Joining the Communication Cable 44
Changing Jumper Positions 44
Standard Controller Functions 45
Inspection and Start Up Checklists 51

Receiving and Inspecting 51
Handling and Installing 51
Starting-up the Unit 51
Starting-up and Operating the Wine Guardian Split System 52
Turn on the Unit 52
Testing the Fan 52
Running the Unit 52
Cycling the Unit 53
Setting the Remote Interface Controller 53
Regulating the Wine Cellar Temperature 53
Changing the Air Flow Direction 53
Maintenance 54
General 54
Cleaning the Condensate Drain System 55
Cleaning the Humidifier 55
Heating Coil Option 55
Maintenance Schedule 56
Monthly 56
Yearly 56
Troubleshooting 57
Typical start up problems 57
Unit does not start up 57
Power switch light is on and the remote interface controller light is off 57
Power switch light is on and the remote interface controller light is on 57
Unit is operating and blows evaporator air, ...58
Cellar temperature too cold (below 51 degrees) when unit is running 58
Cellar temperature too cold (below 51 degrees) when unit is not running 58
Humidity too low or supply air is too cold, without optional humidifier 58
Humidity too low, without optional humidifier 59
Humidity too low, with optional humidifier 59
Humidity too high when unit is running but not cooling 59
Humidity too high when unit is not running 59
Humidity too high when unit is running and cooling 59
Unit operates but the power switch light is not ON 60
Unit is leaking water 60
Unit is running properly, but the sound of the unit objectionable 60
High Pressure Switch has Shut the Unit Down 60
Instructions to Reset High Pressure Switch 61
Advanced Troubleshooting 62
Evaporator Coil is Freezing 62
High pressure switch keeps tripping 62
Unit cycles on and off more than 8 times/hr 62
High pitched or loud rubbing noise, clanking or vibration 62
Replacing the blowers 62

Contact and Warranty Information 63
Contact Information.....63
Warranty and Warranty Procedure 63
Warranty 64

Directory of Terms

Ambient Air – The surrounding area outside the wine cellar such as a room, basement, garage or outdoors.

BTU/H – British thermal units/hour. A unit of measurement to describe the power of heating and cooling system.

CFM – Cubic feet per minute. A unit of measurement for the amount of air handled by the fan.

Condensate / Condensation – The water formed out of the air when it is cooled below a certain temperature (called dew point). Often referred to as "sweating" on pipes and cold surfaces. This water collects at the bottom of the evaporator or cooling coil and drains out of the unit through the drain line.

Condensing Unit (Heat Rejection) – The condensing unit uses the compressor, condenser coil and fan to remove heat from the refrigerant to the ambient air *outside* the wine cellar. The word condenser refers to the condensation of the refrigerant from gas to liquid phase.

CSA/ETL – Canadian Standards Association/Edison Testing Laboratory (product compliance to safety standards)

F – (Degrees) Fahrenheit

Fan Coil Unit (Evaporator Cooling) – The fan coil unit uses the cooling coil and the fan to remove heat from the air *inside* the wine cellar to the refrigerant, cooling the air and condensing moisture out of the air. The word evaporator refers to the evaporation of the refrigerant from liquid to gas phase in the coil. The fan coil unit is ducted to or can be placed inside the wine cellar.

Flexible Duct – Round ducts with steel reinforced plastic liners, a layer of insulation and an outer plastic layer used to convey the air from the unit to the wine cellar or ambient space.

Grille or Diffuser – Inlet or outlet plates to direct the airflow or protect the inside of the unit.

Heat Gain / Loss – The amount of cooling or heating expressed in watts transferred between the wine cellar and the ambient space. The Wine Guardian must offset this heat/gain loss.

Inlet Air – The air returning from the wine room to the Wine Guardian fan coil.

I.D. – Inside diameter

NEC – National Electrical Code

O.D. – Outside diameter

Psig Pounds – Force per square inch gauge

Recovery – The amount of cooling the unit does to return the cellar to its set point temperature after some new heat load is introduced, such as people or new cases of warm wine entering the cellar.

Return Air - The air leaving the cellar and returning to the inlet of the fan coil. (See Inlet Air above)

TXV – Thermal expansion valve

VAC – Volts alternating current

SP – Static pressure. Unit of measurement (inches of water column) of the pressure of the air handled by the fan.

Set Point – The desired temperature or humidity set on the remote interface controller or humidistat.

Supply Air - The air entering the wine cellar from the discharge of the fan coil.

Illustrations

Overview of the Wine Guardian fan coil 7

Refrigeration Illustration of the Wine Guardian fan coil 7

Ducted split system specifications sheet 9

Wiring diagrams for ¼ and ½ ton units.....10

Wiring diagram for the 1-ton unit 11

Wiring diagram for the 2-ton unit 12

24-volt contactor detail sheet 13

Condensing section wiring schematics.....14

Airflow diagram 22

Mounting illustrations.....26

Sample piping illustration 34

Receiving, Inspecting and Unpacking the Wine Guardian Unit

NOTE: Wine Guardian units are factory assembled and tested prior to shipment. The Wine Guardian Ducted Split System consists of two separate components, the Wine Guardian fan coil and condensing unit. These ship from separate manufacturing facilities and therefore may not arrive on the same date and time.

Each Wine Guardian component is shipped in a corrugated box. A shipment may include one or more boxes containing accessories.

- ✓ Lift at the designated handhold locations only or fully support from underneath.
- ✓ Before opening, inspect the packing crates or boxes for obvious signs of damage or mishandling.
- ✓ Write any discrepancy or visual damage on the bill of lading before signing.
- ✓ Inspect all equipment for any sign of damage caused during transit.
- ✓ Report all visual or concealed damage to the carrier and file a claim immediately.
- ✓ Thoroughly inspect the contents for any visible damage or loose parts.

IMPORTANT
If this procedure is not followed, the shipping company may reject the claim and the consignee may suffer the loss. Do not return the shipment to the factory.

Review the Packing Slip to Verify

- ✓ Model number
- ✓ Factory installed options
- ✓ Unit accessories

If any items listed on the packing slip do not match your order information, contact the place of purchase immediately.

Check the fan coil unit for:

- ✓ An electrical power cord
- ✓ A remote interface controller with communications cable plugged into side of unit
- ✓ A drain line coming out of the unit
- ✓ A 24 volt contactor and enclosure
- ✓ One supply duct collar and one return duct collar

Check the condensing unit for:

- ✓ Weather proof enclosure, top and sides
- ✓ Installation, Operation and Maintenance manual

General Description

View Fig. 1 and Fig. 2 on page 13 for details

IMPORTANT
Design and specifications are subject to change without notice

The Wine Guardian cooling unit is a professional grade, American-manufactured, split two-piece climate control unit designed specifically for the storage of wine at cellar temperatures. It is designed for easy installation and operation. Wine Guardian uses digital electronic controls and R-134a refrigerant. The entire Wine Guardian fan coil section is tested at the factory and the condensing unit is shipped separately. All components are of a high quality standard commercial grade. The entire system is approved by ETL according to UL 1995 and CSA safety standards. All wiring complies with NEC. Each Wine Guardian fan coil section is furnished with a sealed, UL-approved power cord and plug.

The Wine Guardian Ducted Split System Contains

1. **A Wine Guardian Fan Coil Unit with**:
   - ✓ A thermal expansion valve to control the flow of refrigerant into the evaporator coil
   - ✓ A built in condensate drain trap. No external trap is required.
   - ✓ A removable control panel for ease of service
   - ✓ Supply duct collar
   - ✓ Return duct collar
   - ✓ Remote interface controller and control cable

2. **A Condensing Unit with**:
   - ✓ A filer dryer to keep the refrigerant clean and free of contaminants
   - ✓ A sight glass to observe the level of refrigerant
   - ✓ A manual reset high pressure switch on the discharge to protect the compressor from high pressures.
   - ✓ Auto reset low pressure switch
   - ✓ 24-volt contactor for control of fan coil unit
   - ✓ Crankcase heater
   - ✓ Low ambient refrigeration controls
   - ✓ Outdoor enclosure

Wine Guardian Fan Coil Unit

The Wine Guardian fan coil unit meets its rated capacities for total BTU/H and CFM at design cellar conditions and external static pressures. The fan coil unit is capable of rated CFM against the static pressure imposed by recommended ductwork. The fan is a motorized impeller type, statically and dynamically balanced, and uses permanently lubricated direct drive motors requiring no maintenance.

The Wine Guardian fan coil section operates as air passes through the cooling coil and is cooled by the refrigerant inside the coil. This causes any excess humidity in the air to condense and be captured in the drain pan and piped outside the unit. Air then enters the fan where it is pressurized and discharged out of the unit through one of five openings. Optional heating coils are located between the cooling coil and the fan. These coils heat the air to prevent low temperatures in the cellar.

All exterior framing of the Wine Guardian is powder coated 0.063 inch gauge aluminum to prevent rust and corrosion. All coils are copper tubes, aluminum fins, with an electrocoating to protect against premature corrosion. The unit uses an external drain to remove excess moisture and not reintroduce it into the cellar or ambient space. Removable, multiple access doors are provided to facilitate cleaning and maintenance, duct connections, and access to components and wiring. The fan coil has at least five discharge outlets to facilitate custom installations.

Each unit is provided with a pre-wired and tested remote interface controller for remote mounting within the wine cellar. The remote interface controller has multiple control functions for cooling, heating and operation. It has a fully automatic mode to switch between heating and cooling.

Electrical Controls

The main electrical control board and components are located on a separate panel accessible through a side door panel or by removal of the on/off panel from the system chassis. All wiring is in accordance with the NEC. Wires are numbered and color coded to match the wiring diagrams.

Electric power is supplied by a single factory-furnished cord and plug. All external controls are digital and proprietary to Wine Guardian products. Only approved communication cable and Wine Guardian controllers are suitable for proper system operation.

Condensing Unit

Compressors are rotary, self-lubricating, permanently sealed, hermetic reciprocating-type compressors, with internal overload protection and capacitor start. They include a minimum of 20 months manufacturer's warranty and an optional five-year warranty. Compressors are mounted on rubber-in-shear isolators to reduce noise and vibration. Additional features include a liquid line filter drier, Sporlan Head Master Controls, a liquid line receiver and refrigerant sight glass. Each unit is housed in a painted steel enclosure suitable for outdoor installation. The outdoor enclosure has adequate area for ventilation and refrigerant piping penetrations.

IMPORTANT

The air exhaust from the condensing unit is hot and will be 25 to 35 degrees F above the entering temperature. The condensing units are rated for a maximum temperature of 115 degrees F. The condensing units should be installed in a well-ventilated area to ensure proper air flow across the condenser coil and to limit short cycling.

Accessories and Optional Equipment

Heating Coils
An optional heating coil is built in and requires no additional power source. The electric heating option is factory installed and includes primary and secondary over-temperature protection devices per UL and NEC.

Duct Collars and Flexible Ducts
Ducting for the Wine Guardian is sold in kits by size for each unit. Each kit contains two adapter collars, one 25 foot length of round flexible duct and two straps. The number of duct kits needed depends on the wine cellar layout and application. The size of the kit depends on the model Wine Guardian selected. Follow installation instructions carefully. Poorly or incorrectly installed ducts can degrade the performance of your unit dramatically.

Extended Compressor Warranty
The Wine Guardian uses only the best commercially available compressors on the market. However, since the compressor is the single most expensive component in the unit, it is recommended that you purchase the extended warranty option.

Low Ambient Option – Standard on all Wine Guardian Ducted Split Systems
A factory-installed low ambient option is available that makes the Wine Guardian capable of exposure to low ambient temperatures. This feature controls the condenser fan operation based on head pressure and heats the compressor oil reservoir. The low ambient option is recommended whenever the condenser section is exposed to air temperatures below 40 degrees F.

Condensate Pump
An optional Wine Guardian automatic condensate pump is available to pump the water to a remote sink, drain pipe or outside. It requires a separate 120 volt electrical outlet.

Humidifier
Another popular option for the Wine Guardian is a humidifier. The humidifier is available for split system installation and can be retrofitted onto any existing Wine Guardian unit. Each humidifier is furnished with a communication cable connection to plug into the side of the Wine Guardian fan coil unit. It is then controlled by the same remote interface controller that is used for the operation of the Wine Guardian unit. The humidifier mounts directly onto the Wine Guardian unit and requires a water supply and drain for operation.

CAUTION

CAREFULLY FOLLOW THE INSTALLATION INSTRUCTIONS INCLUDED WITH THE HUMIDIFIER. REFER TO THE INSTRUCTIONS CONTAINED IN THE BOX FOR THE HUMIDISTAT.

Overview of the Wine Guardian fan coil

Fig. 1

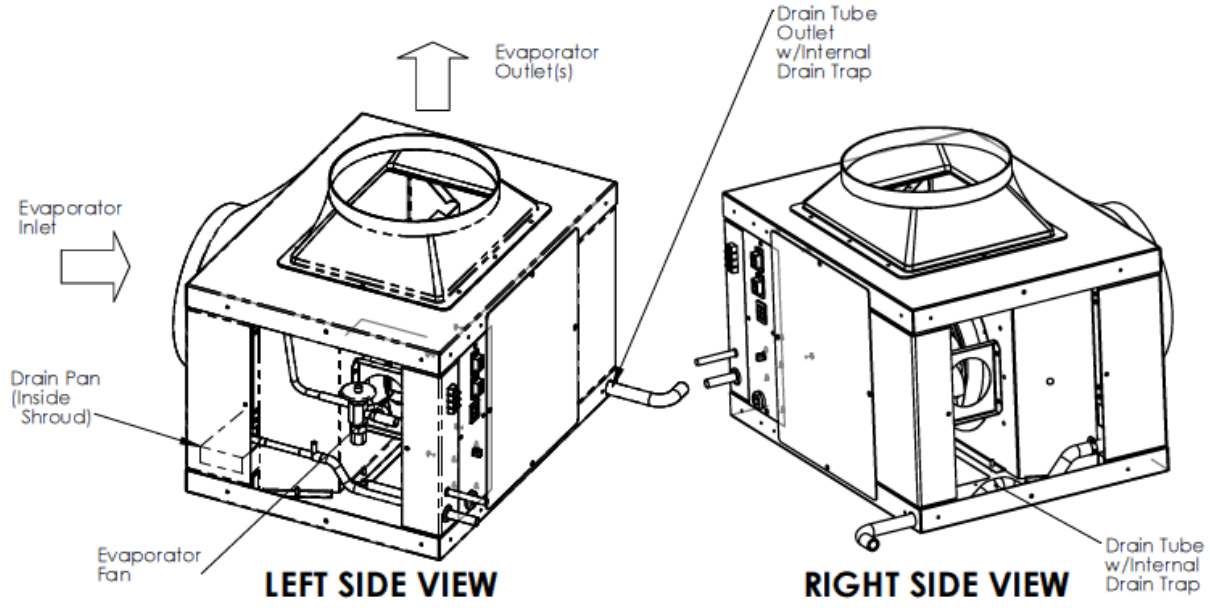

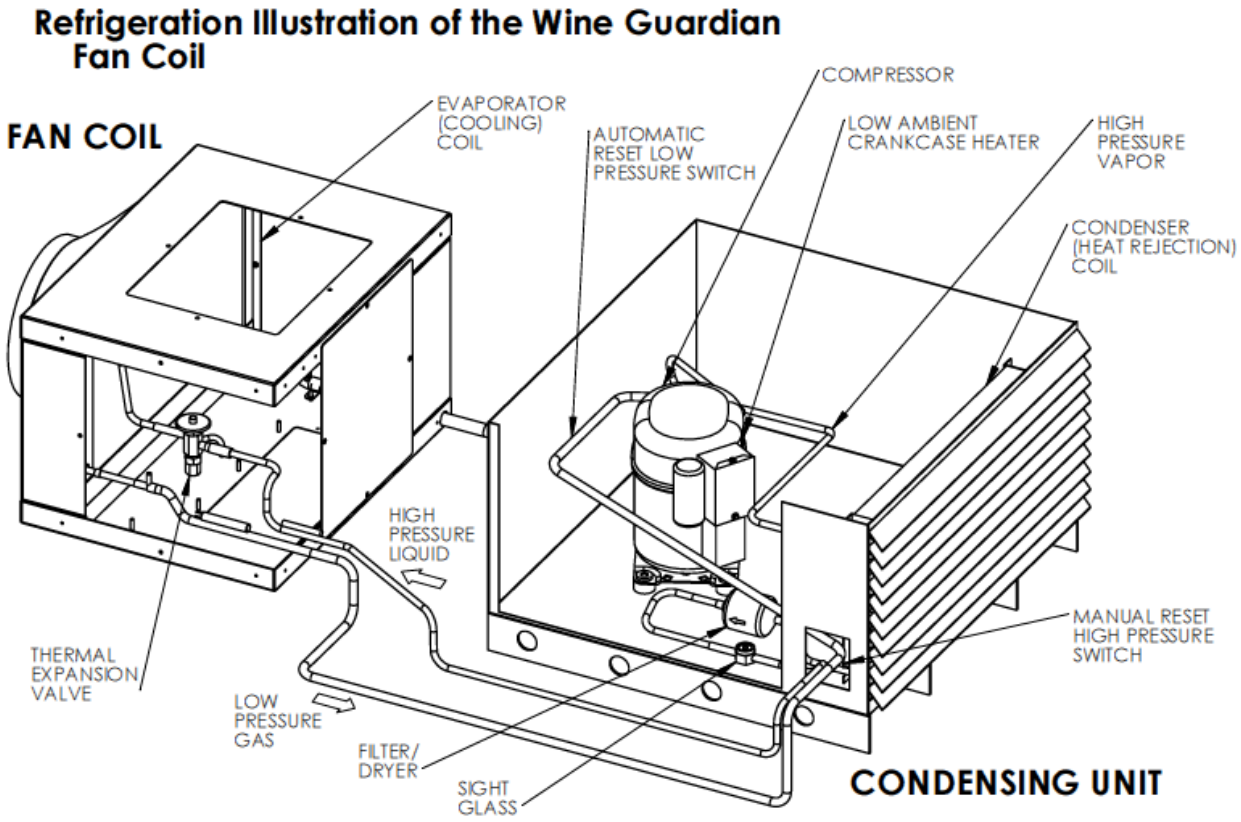

Fig. 2

Wine Guardian - Ducted Split System

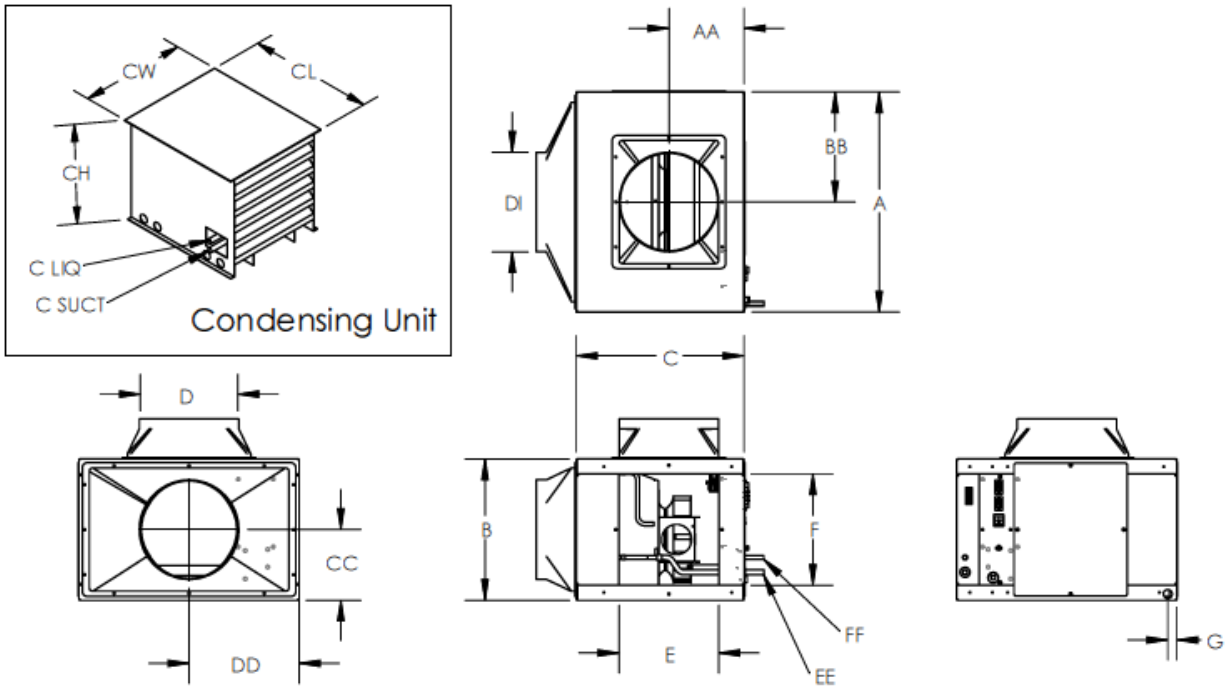

Fig. 3

Model Number		SS025	SS050	SS088	SS200
Dimensions - Nominal					
A – Width	Inches	14.00	22.00	22.00	22.375
B – Height	Inches	14.132	14.132	14.132	18.00
C – Length	Inches	16.75	16.75	16.75	20.50
D – Evap. Discharge (OD)	Inches	7.94	9.938	9.938	11.94
DI – Evap. Inlet (OD)	Inches	7.938	9.938	9.938	11.94
E – Outlet opening width	Inches	9.980	10.00	10.00	11.63
F - Outlet opening height	Inches	11.13	11.13	11.13	15.00
G – Drain outlet location	Inches	0.656	0.919	0.919	0.848
AA – Discharge opening height	Inches	7.50	7.50	7.50	9.188
BB – Discharge opening width	Inches	7.00	11.00	11.00	11.188
CC – Inlet opening height	Inches	7.066	7.066	7.066	9.00
DD – Inlet opening width	Inches	7.00	11.00	11.00	11.188
EE – Suction Line (OD)	Inches	0.375	0.500	0.500	0.500
FF – Discharge Line (OD)	Inches	0.250	0.250	0.250	0.375
Weight	Lbs.				
CH – Condenser Height	Inches	18.25	18.25	22.25	27.13
CL – Condenser Length	Inches	24.13	24.13	30.25	32.25
CW – Condenser Width	Inches	19.13	19.13	23.38	38.25

Table 1

Ducted split system specifications sheet

WINE GUARDIAN®

SPECIFICATIONS

DUCTED SPLIT SYSTEMS

Model Number		*SS025*	*SS050*	*SS088*		*SS200*	
Wine room size	**Cubic feet**	**400 - 2000**	**800 - 3000**	**1600 - 6000**		**2600- 8600**	
Performance							
Net Cooling Capacity*	Total /	@115V	@115V	@208V	@230V	@208V	@230V
@10 Deg F condenser inlet air	BTUH	3120/2150	4380/3240	9965/6965	10270/7180	11,340/8200	11,750/8400
@40 Deg F condenser inlet air	BTUH	3150/2280	5370/3890	10310/7080	10630/7300	11,400/8350	11,800/9300
@60 Deg F condenser inlet air	BTUH	4140/3000	5770/4170	10440/7400	10760/7630	15,150/11,100	15,700/12,100
@70 Deg F condenser inlet air	BTUH	3880/2840	5550/4260	9855/6935	10160/7150	14,800/10,800	15,300/11,800
@80 Deg F condenser inlet air	BTUH	3830/2870	5500/4250	9140/6920	9420/7135	14,400/10,550	14,900/11,400
@100 Deg F condenser inlet air	BTUH	3400/2735	4850/3630	7680/5895	7920/5870	13,800/10,100	14,300/11,100
@115 Deg F condenser inlet air	BTUH	3110/2525	4640/3360	6985/5085	7200/5240	12,400/9100	12,800/10,100
Controls							
Type		Room mounted non-programmable combination thermostat humidistat					
Temperature Accuracy/RH% Accuracy		+/- 1 Deg F / +/- 10% RH					
Fan-coil Section							
Fan Motor Size	Rated Watts	75	100	115	195	160	180
Rated Air Flow (free blow)	CFM	245	410	460	520	740	800
Rated Air Flow @ pressure loss	CFM	220 @0.10" wc	380 @0.20" wc	410 @0.20" wc	410 @0.20" wc	710@0.35"wc	750@0.35"wc
Heat (Option)							
Type		electic	electric	electric	electric	electric	electric
Capacity	Watt/BTUH	1000/3400	1000/3400	1635/5582	2000/6800	1635/5582	2000/6800
Humidifier (Option)							
Type		Removable drip pad with integral fan					
Capacity - water temp of 60 Deg F	lbs./hr	0.42					
Capacity - water temp of 90 Deg F	lbs./hr	0.97					
Capacity - water temp of 120 Deg F	lbs./hr	1.11					
Electrical Requirements							
Power	volt/phase/hz	115/1/60	115/1/60	208/1/60	230/1/60	208/1/60	230/1/60
Current Draw - Cooling mode	Amps	0.7	0.9	0.85	0.8	0.8	0.8
Current Draw - Heating mode	Amps	9.4	9.6	8.7	9.5	8.7	9.5
Minimum Circuit Size (wheat option)	Amps	11.6	11.8	10.7	11.7	10.7	11.7
Optional Humidifier	Amps	0.3	0.3	0.2	0.2	0.2	0.2
Cabinet							
Construction		Aluminum					
Finish		Black - textured epoxy powder coat					
Weight	lbs.	25	35	37		56	
Dimensions - inches	Length	16.75	16.75	16.75		21.00	
	Width	14.00	22.00	22.00		22.00	
	Height	14.13	14.13	14.13		18.00	
Condensate Drain - 1/2" id tubing	Inches	0.5	0.5	0.5		0.5	
Condensing Unit		M2FH-0039-IAA-0H2	M2FH-A056-IAA-0H2	FTAH-A101-CFV-0H2		FFA9-A2SZ	
Nominal Compressor	HP	1/3 hp	1/2 hp	1 hp		2.5 hp	
Fan Motor Size	Watts	140	140	130		250	
Rated Air Flow (free blow)	CFM	450	450	710		1700	
Weight	lbs.	85	98	152		250	
Enclosure							
Construction		Steel	Steel	Steel		Steel	
Finish		Paint	Paint	Paint		Paint	
Dimensions	Length	24.13	24.13	30.25		32	
	Width	19.13	19.13	23.38		38	
	Height	18.25	18.25	22.25		27	
Electrical Requirements							
Power	volt/phase/hz	115/1/60	115/1/60	208/1/60	230/1/60	208/1/60	230/1/60
MCA	Amps	10.7	15.5	14.8	14.8	19	19
Max brkr	Amps	15	20	20	20	30	30
Agency Approval(s)		ETLc	ETLc	ETLc		ETLc	

1. Net cooling capacity at entering temperature and humidity conditions of 57 Deg F and 55% RH at rated airflow. Reduce capacity by 3% for each 10% reduction in evaporator airflow.
2. Wine Guardian reserves the right to make changes to this document without prior notice at its sole discretion.
3. All ratings at sea level.

7000 Performance Drive | North Syracuse, New York 13212 USA
800-825-3268 | 315-452-7420 | Fax 315-452-7420 | www.wineguardian.com | info@wineguardian.com

Wiring Diagram for SS025

Fig. 4

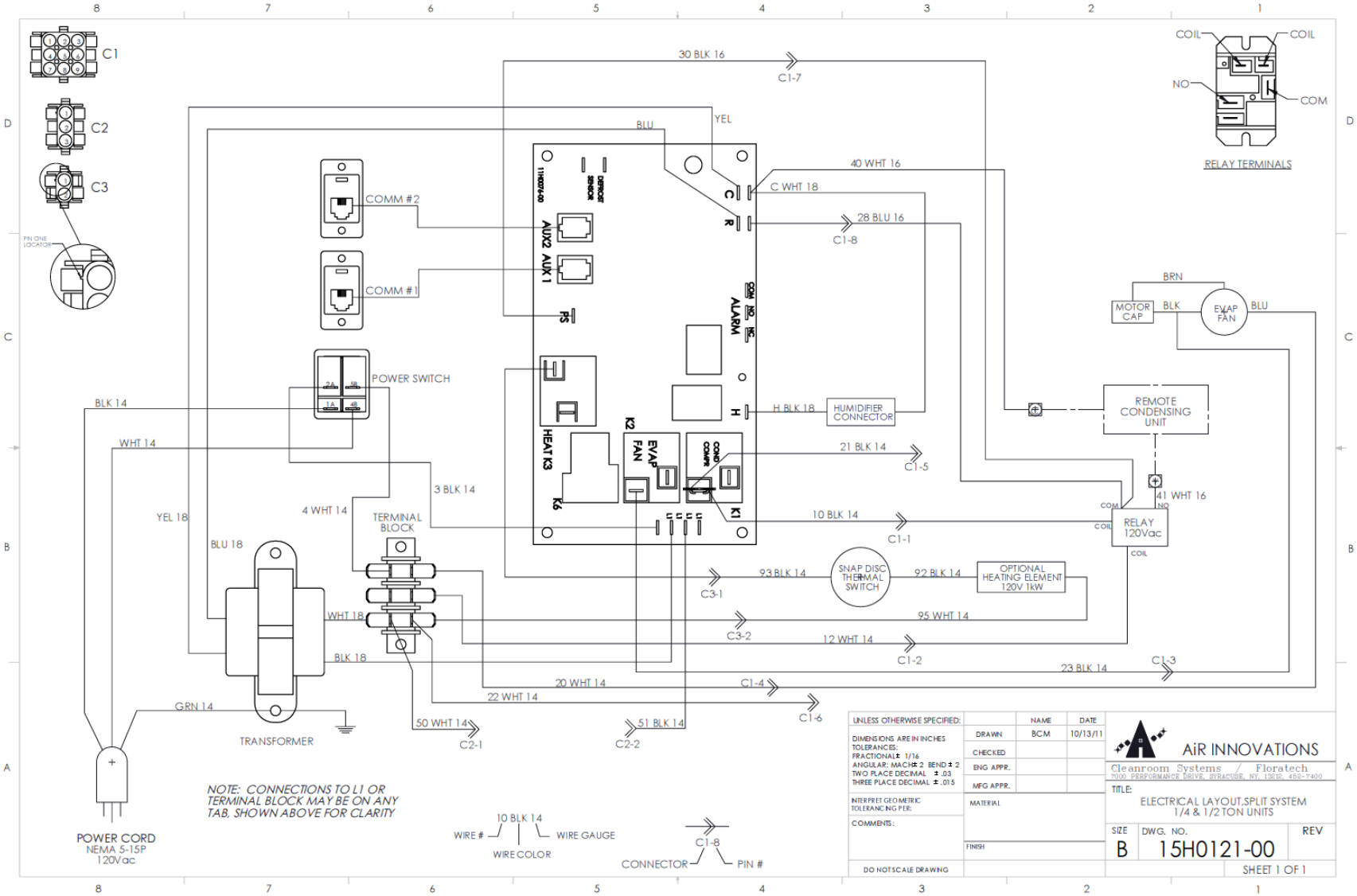

Wiring Diagram for SS088 Units

Fig.5

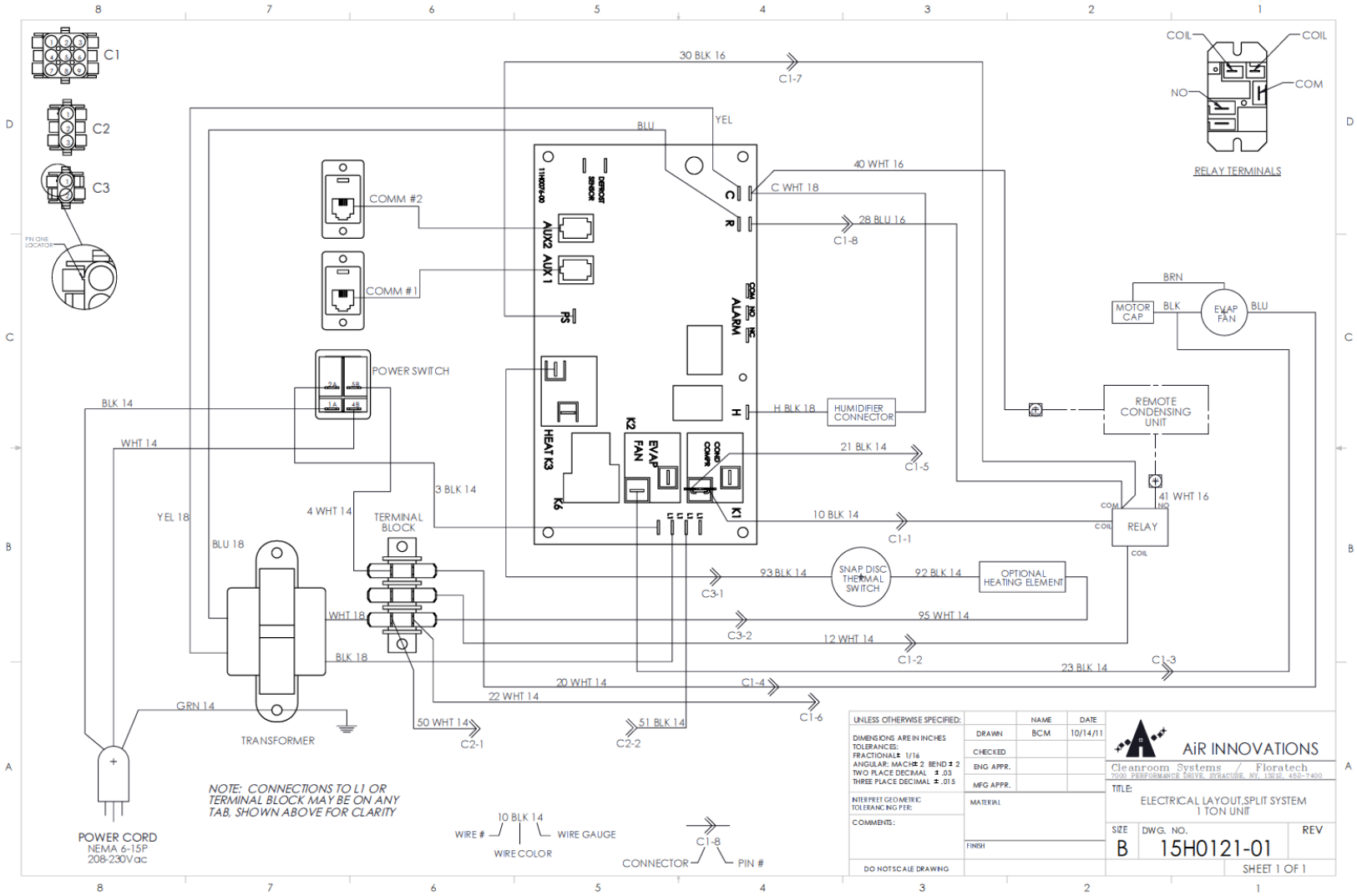

Wiring Diagram for SS200 Units

Fig. 6

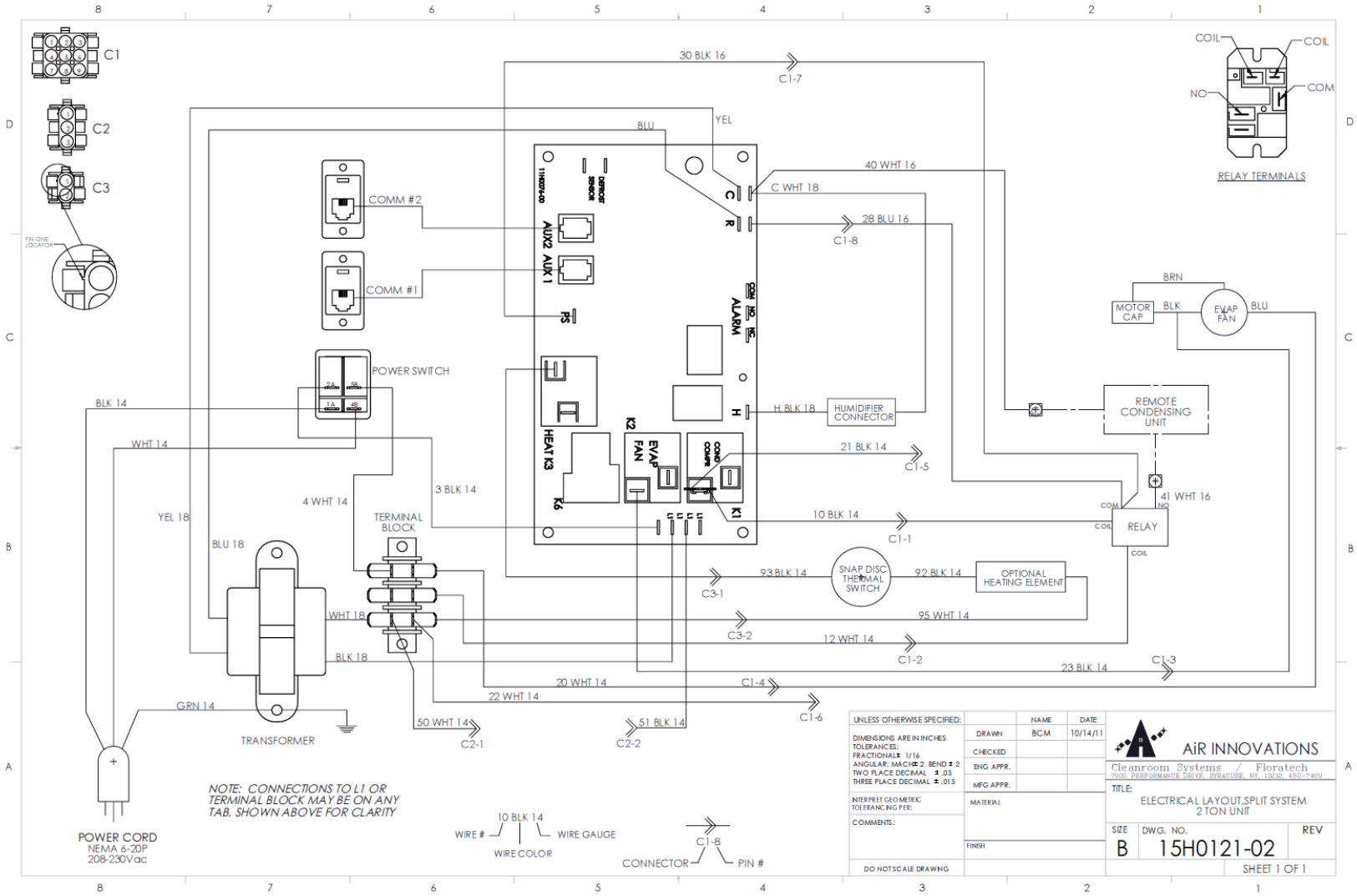

24-Volt Contactor Detail Sheet

Fig. 7

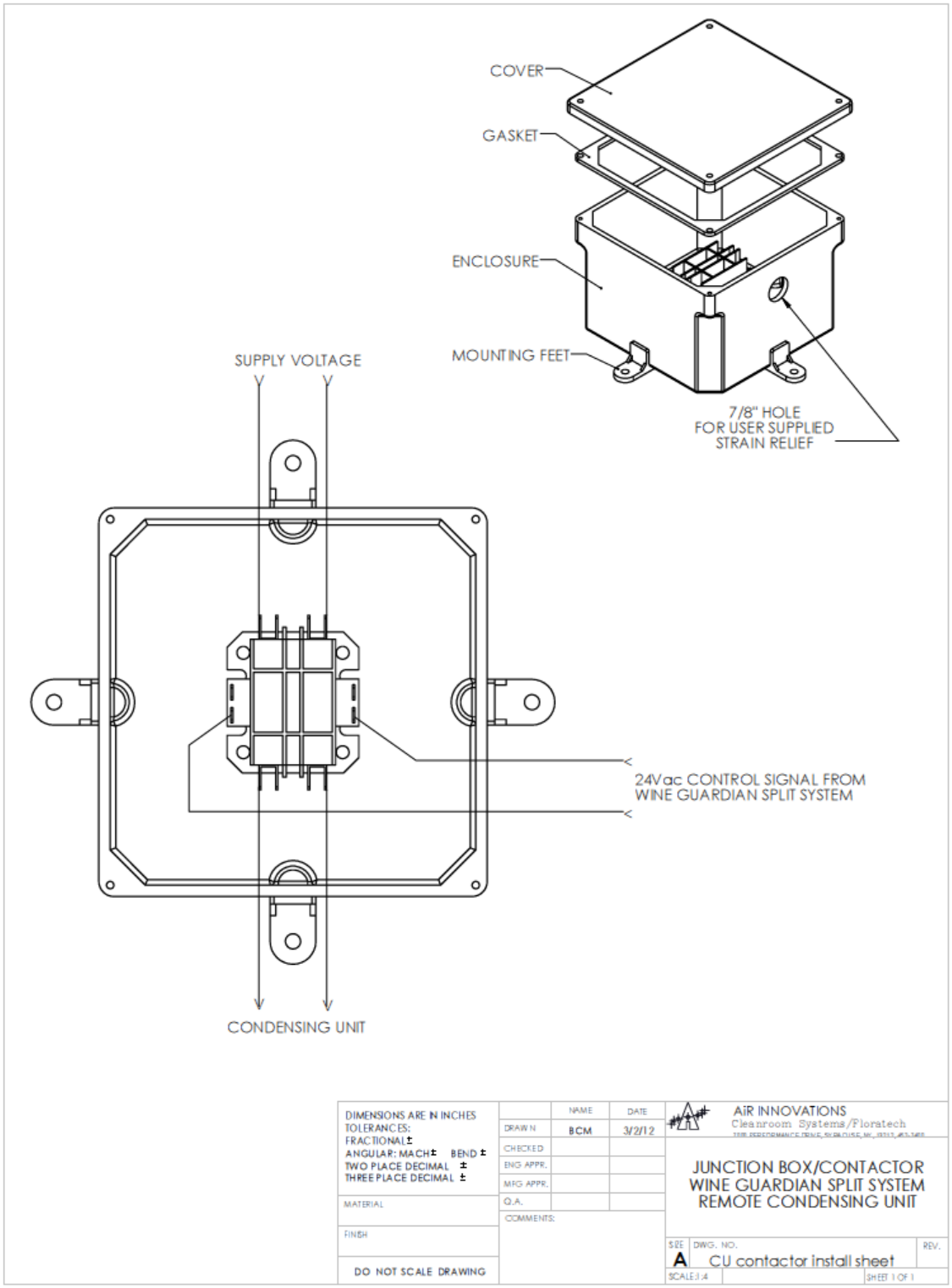

Condensing Section Wiring Schematic for SS025

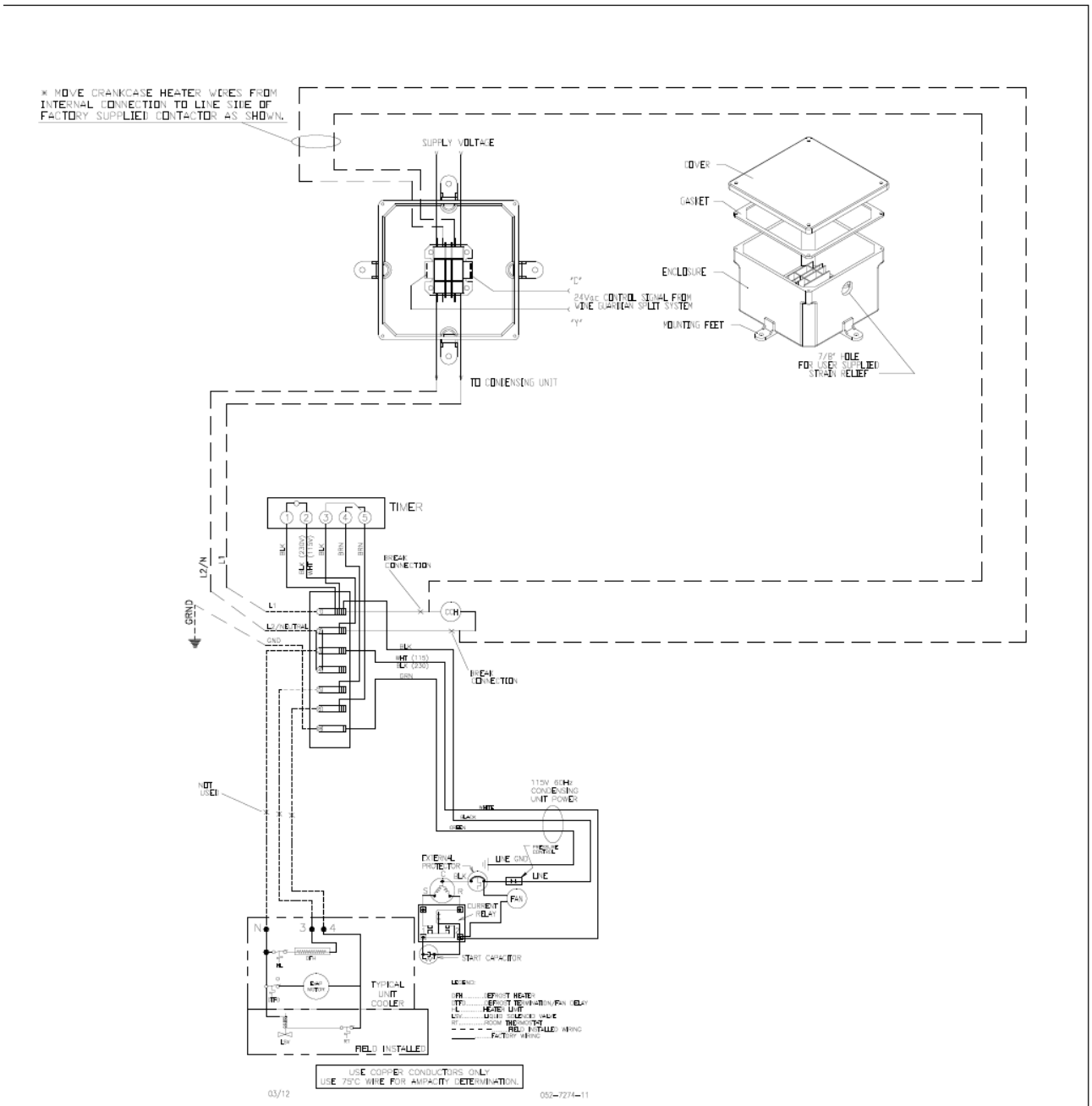

A	ADDED "C" & "Y" TO LV WIRES.	10/10/13	ECNH-0437	JFS
REV	DESCRIPTION	DATE	ECN	INITIAL

TOLERANCE: UNLESS OTHERWISE NOTED .XX ±.03 .XXX ±.015 ANG. ± 1°

SCALE: AS NOTED

1/4 TON SYSTEM (SS025)

	INITIAL	DATE
DRAWN BY	JFS	6/18/13
CHECKED		
APPROVED		

TITLE: CONTACTOR/CONDENSING UNIT WIRING FOR SS

MATERIAL

DWG 15H0126-02

SHEET 1 OF 1

REV A

Condensing Section Wiring Schematic for SS050

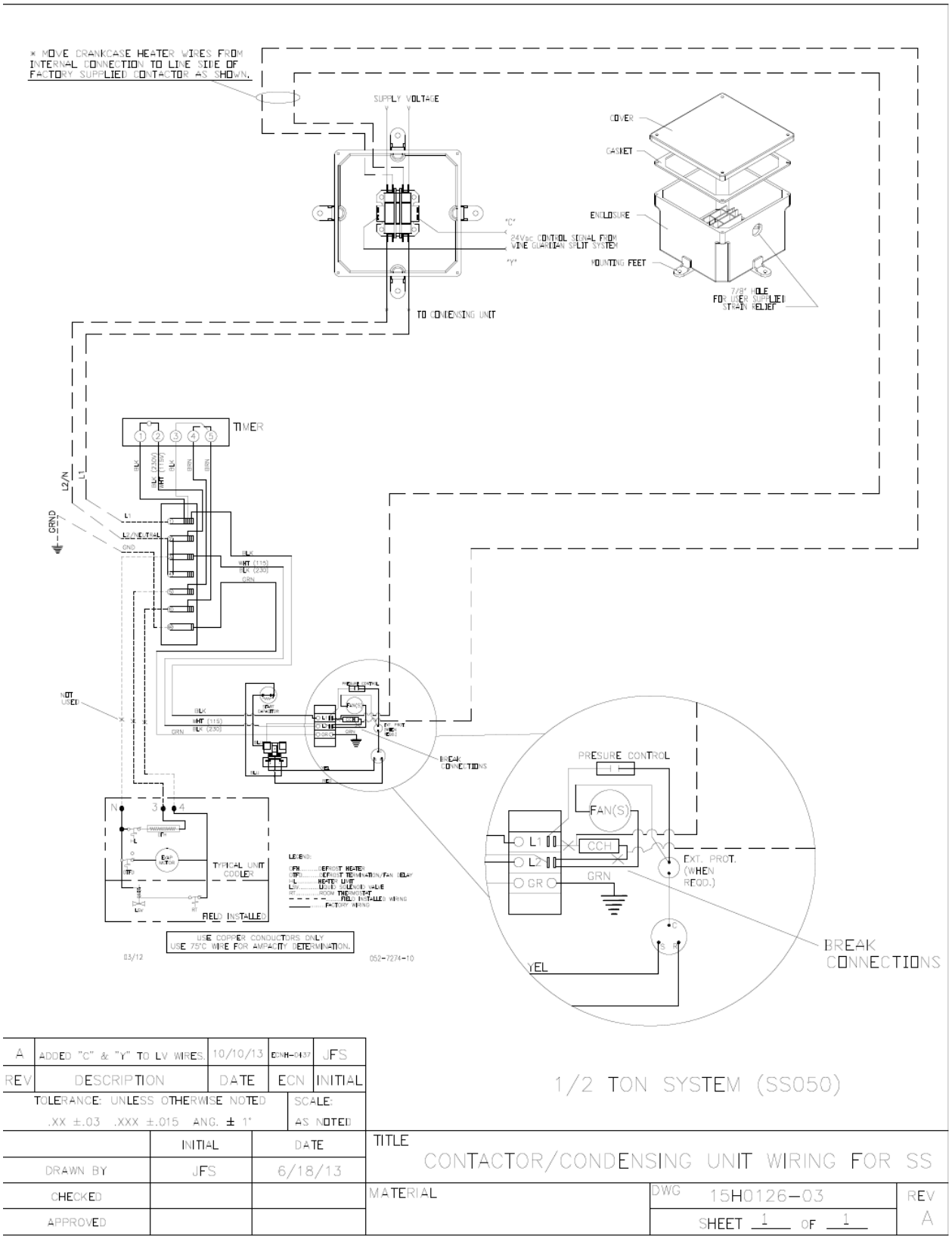

REV	DESCRIPTION	DATE	ECN	INITIAL
A	ADDED "C" & "Y" TO LV WIRES.	10/10/13	ECNH-0437	JFS

TOLERANCE: UNLESS OTHERWISE NOTED .XX ±.03 .XXX ±.015 ANG. ± 1°

SCALE: AS NOTED

1/2 TON SYSTEM (SS050)

	INITIAL	DATE
DRAWN BY	JFS	6/18/13
CHECKED		
APPROVED		

TITLE: CONTACTOR/CONDENSING UNIT WIRING FOR SS

MATERIAL

DWG 15H0126-03

SHEET 1 OF 1

REV A

Condensing Section Wiring Schematic for SS088

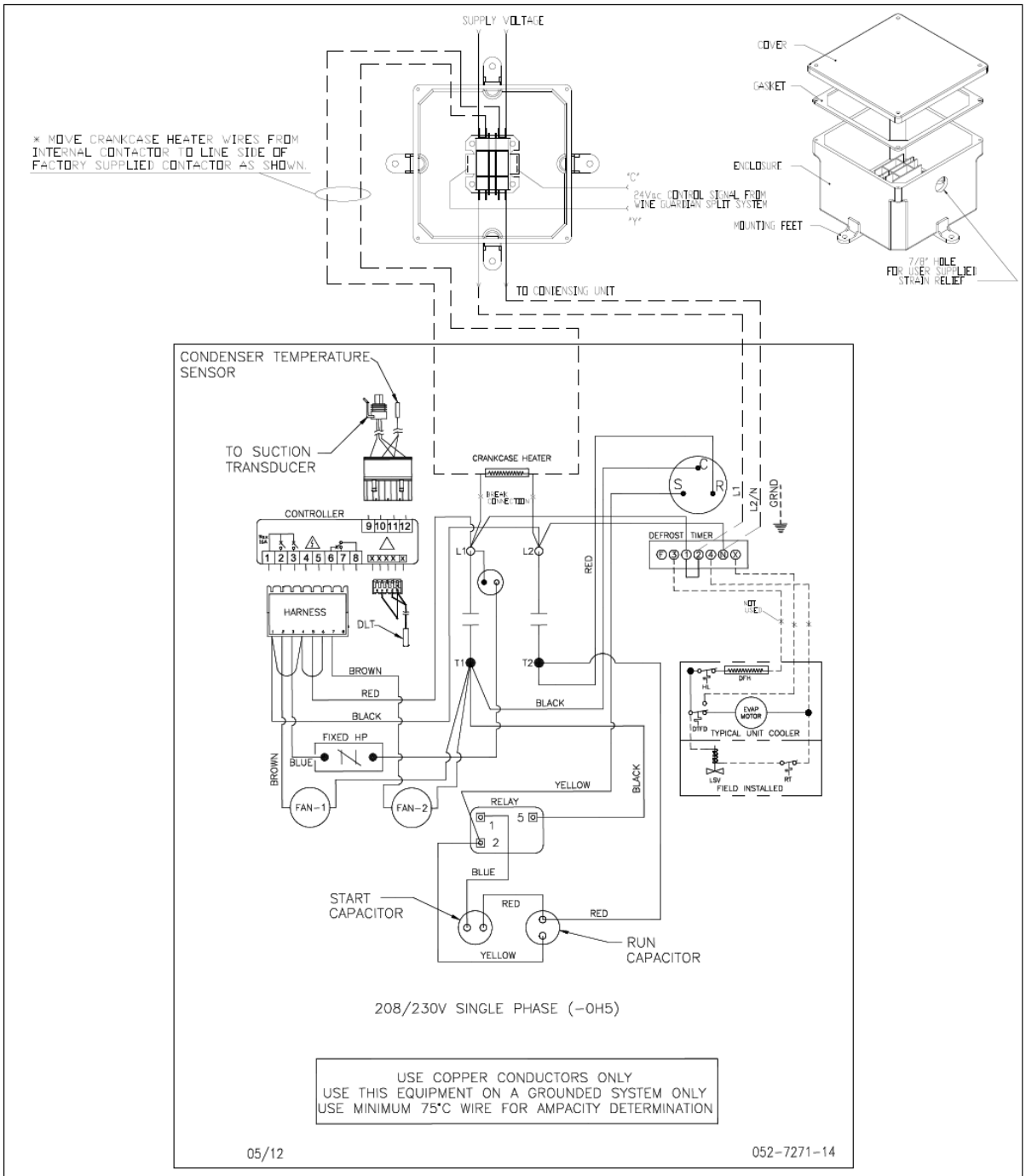

REV	DESCRIPTION	DATE	ECN	INITIAL
A	ADDED "C" & "Y" TO LV WIRES.	10/10/13	ECNH-0437	JFS

TOLERANCE: UNLESS OTHERWISE NOTED .XX ±.03 .XXX ±.015 ANG. ± 1°

SCALE: AS NOTED

1 TON SYSTEM (SS088)

	INITIAL	DATE
DRAWN BY	JFS	05/15/13
CHECKED		
APPROVED		

TITLE: CONTACTOR/CONDENSING UNIT WIRING FOR SS

MATERIAL

DWG 15H0126-01

SHEET 1 OF 1

REV A

Condensing Section Wiring Schematic for SS200

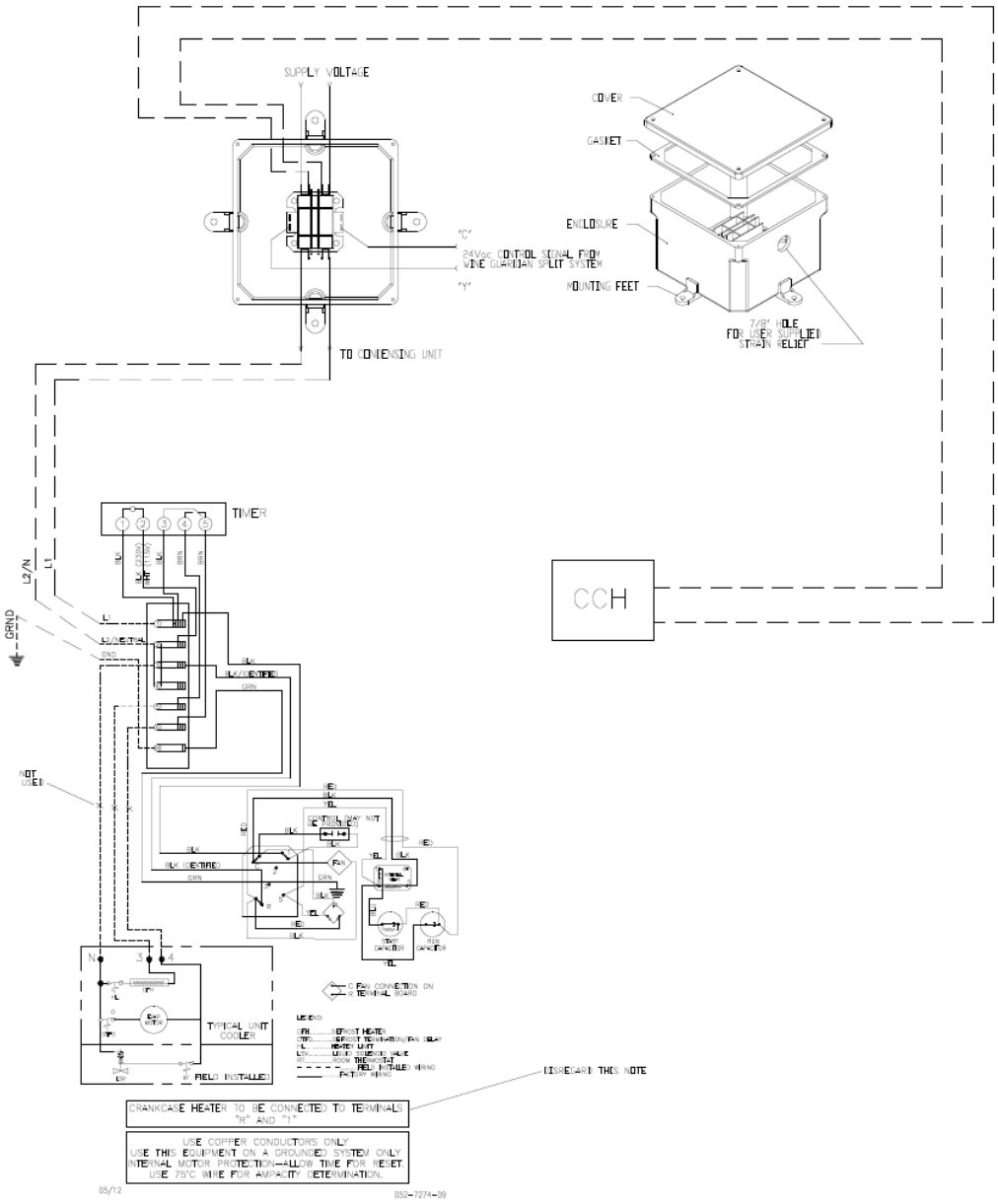

A	ADDED "C" & "Y" TO LV WIRES.	10/10/13	ECNH-0437	JFS
REV	DESCRIPTION	DATE	ECN	INITIAL

TOLERANCE: UNLESS OTHERWISE NOTED .XX ±.03 .XXX ±.015 ANG. ± 1°

SCALE: AS NOTED

2 TON SYSTEM (SS200)

	INITIAL	DATE
DRAWN BY	JFS	6/18/13
CHECKED		
APPROVED		

TITLE: CONTACTOR/CONDENSING UNIT WIRING FOR SS

MATERIAL

DWG 15H0126-04

SHEET 1 OF 1

REV A

Safety

IMPORTANT
The equipment described in this manual uses electricity. When using this equipment, be sure to follow the safety procedures outlined in this manual.

Safety Message Conventions

Safety messages contained in this manual, DANGER, WARNING, and CAUTION are bold and highlighted in red for quick identification.

Danger

A Danger message indicates an imminently hazardous situation which, if not avoided, results in death or serious injury. Messages identified by the word **DANGER** are used sparingly and only for those situations presenting the most serious hazards.

Following is a typical example of a Danger message as it could appear in the manual:

DANGER
HIGH VOLTAGE - RISK OF SERIOUS INJURY OR DEATH
High voltages are present in the cabinets.
Before opening panels turn off all power.
Use the Lockout/Tagout procedure.

Warning

A Warning message indicates a potentially hazardous situation which, if not avoided, could result in death or serious injury.

Following is a typical example of a Warning message as it could appear in the manual:

WARNING
RISK OF PERSONAL INJURY OR DAMAGE TO EQUIPMENT
Modification to the equipment may cause injury.

Caution

A Caution message indicates a potentially hazardous situation which, if not avoided, could result in minor or moderate injury. It may also be used to alert against unsafe practice.

Following is a typical example of a Caution message as it could appear in the manual:

CAUTION
RISK OF PERSONAL INJURY OR DAMAGE TO EQUIPMENT
Improper installation may result in the equipment malfunctioning and a safety hazard.
Read all of the installation instructions before installing the Wine Guardian unit.

Lockout/Tagout Procedure

1) Turn off the power switch (indicator light should be off)
2) Unplug the unit from the electrical outlet and cover the outlet to prevent accidently plugging in the unit.
3) Turn off circuit breaker or disconnect switch at condensing unit.

Safety Considerations

The equipment covered by this manual is designed for safe and reliable operation when installed and operated within its designed specifications. To avoid personal injury or damage to equipment or property when installing or operating this equipment, it is essential that qualified, experienced personnel perform these functions using good judgment and safe practices. See the following cautionary statements.

IMPORTANT
Installation and maintenance of this equipment is to be performed only by qualified personnel who are familiar with local codes and regulations, and are experienced with this type of equipment.

Safety Hazards

Exposure to safety hazards is limited to maintenance personnel working in and around the unit. When performing maintenance, always use the Lockout/Tagout procedure, which is described in this chapter. Observe the maintenance safety guidelines in this manual.

Electrical Hazards

Working on the equipment may involve exposure to dangerously high voltage. Make sure you are aware of the level of electrical hazard when working on the system. Observe all electrical warning labels on the unit.

Electrical Shock Hazards

All power must be disconnected prior to installation and servicing this equipment. More than one source of power may be present. Disconnect all power sources to avoid electrocution or shock injuries.

Hot Parts Hazards

Electric resistance heating elements must be disconnected prior to servicing. Electric heaters may start automatically. Disconnect all power and control circuits prior to servicing the unit to avoid burns.

Moving Parts Hazards

The Motor and Blower must be disconnected prior to opening access panels. The motor can start automatically. Disconnect all power and control circuits prior to servicing to avoid serious injuries or possible dismemberment.

The fans are free-wheeling after the power is disconnected. Allow the fans to stop completely before servicing the unit to avoid cuts or dismemberment.

Rotating Fan Blades are present in the Wine Guardian unit. Sticking a hand into an exposed fan while under power could result in serious injury. Be sure to use the Lockout/Tagout procedure when working in this area or remove the power cord.

Equipment Safety Interlocks

There are no electrical safety lockouts installed within the unit. The power cord attached to the control box must be disconnected from the power sources prior to working on any part of the electrical system.

Main Power Switch

The main power switch is located on the side of the Wine Guardian unit. **(See Fig.1 on page 36)** It shuts off the power to the fan coil unit. A separate disconnect switch will be wired to the condensing unit. Both switches must be turned off prior to servicing equipment.

Energy Type **Electrical**

Hazard.....Electrocution, electrical burns and shock

Magnitude .....120 VAC and 230 VAC, 1phase, 60 hertz cycles

Control Method.....Disconnect power cord and On/Off switch

DANGER

- **Never** reach into a unit while the fan is running.
- **Never** open an access door to a fan while the fan is running.
- **Disconnect** the power cord switch before working on the unit. The unit may have more than one power source to disconnect.
- **Avoid** risk of fire or electric shock. **Do not** expose the unit to **rain** or **moisture**.

WARNING

- **Check** weights to be sure that the rigging equipment can support and move the Wine Guardian unit safely. Note any specific rigging and installation instructions located in the Installation section of this manual.
- All supports for the unit **must** be capable of safely supporting the equipment's weight and any additional live or dead loads encountered.
- All supports for the unit **must** be designed to meet applicable local codes and ordinances.
- **Do not** remove access panels until fan impellers have completely stopped. Pressure developed by moving impellers can cause excessive force against the access panels.
- Fan impellers continue to turn (free-wheel) after the power is shut off.

CAUTION

- **Clean** only with a dry cloth**.**
- **Never** pressurize equipment above specified test pressure. See Wine Guardian Specification sheet on page 13.
- **Do not use the Wine Guardian near water.**
- **Do not** block any supply or return air register or duct. Install in accordance with the instructions in this manual. Do not defeat the safety purpose of the polarized or grounding type plug. A polarized plug has two blades with one wider than the other. A grounding type plug has two blades and a third grounding prong. The wide blade or the third prong is provided for your safety. If the provided plug does not fit into your outlet, consult an electrician for replacement of the obsolete outlet.
- **Protect** the power cord from being walked on or pinched, particularly at the outlet plugs, convenience receptacles, and the point where it exits the unit.
- **Only** use attachments/accessories specified by the manufacturer.
- **Always** operate this equipment from a 120/230 VAC, 1 phase, 60Hz power sources only.
- **Always** ground the outlet to provide adequate protection against voltage surges and built-up static charges.
- **Refer all** servicing to qualified service personnel. Servicing is required when the unit has been damaged in any way.

Installation

CAUTION
SHARP EDGES
RISK OF SERIOUS INJURY
Sharp edges are present inside the Wine Guardian system.

Pre-installation Test

Test the system before installing it to check for non-visible shipping damage.

To test the Wine Guardian fan coil section:

- ✓ Set the system on the floor or a sturdy level surface.
- ✓ Plug in the system.
- ✓ Press the on/off switch to see if the control illuminates. This indicates the system has power.
- ✓ **A built-in timer within the controller prevents short cycling and keeps the system from turning on right away.** After a five-minute period the fan should turn on and start to deliver air. Listen for any unusual noise or vibration.

Air Flow Diagram

Fig. 1

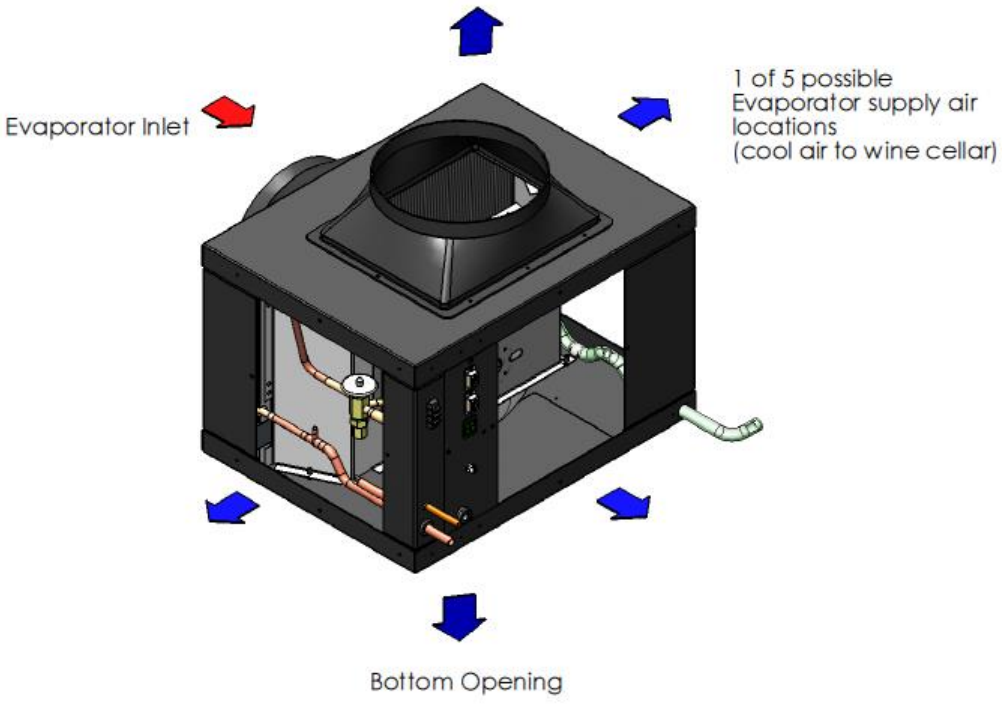

RISK OF PERSONAL INJURY OR DAMAGE TO EQUIPMENT

Modification to the equipment may cause injury or damage to the equipment

DANGER

- ✓ **This equipment is heavy. Place the unit on the floor or on a level and stable surface that can support the full weight of the unit.**
- ✓ **Do not modify the equipment. Modifications may cause damage to the equipment and will void the warranty.**
- ✓ **Never place anything on top of the unit.**
- ✓ **Never block or cover any of the openings or outlets to the unit.**
- ✓ **Never allow anything to rest on or roll over the power cord.**
- ✓ **Never place the unit where the power cord is subject to wear or abuse.**
- ✓ **Do not use extension cords.**
- ✓ **Never overload wall outlets.**
- ✓ **Do not remove or open any cover unless the unit is turned off and the power cord is plugged in.**
- ✓ **Use only dedicated power outlet boxes of the correct capacity and configuration for the unit model.**

CAUTION

RISK OF PERSONAL INJURY OR DAMAGE TO EQUIPMENT

Improper installation may result in the equipment malfunctioning and a safety hazard. Read all of the installation instructions before installing the Wine Guardian unit.

Planning the Installation

IMPORTANT
Installation of residential and commercial split systems must be performed by qualified service technicians with proper training in the installation, start up, service, and repair of these systems. Certification to handle refrigerants is also required.

Addressing Items in the Planning Process

- ✓ Where to locate the fan coil unit? Should it be built into the wine cellar or mounted remote and ducted into the cellar?
- ✓ How to mount the fan coil unit?
- ✓ Decide where to locate the supply and return grilles in the room to achieve the temperature gradient and circulation preferred.
- ✓ Locate the electrical power outlet close to the unit. **Do not use an extension cord!**
- ✓ Locate the condensing unit in a clean, dry and well-ventilated area.
- ✓ Where to locate the remote interface controller and/or remote sensors?
- ✓ Where to run the drain line?
- ✓ Are all the parts available to complete the installation?

Performing a Pre-installation Check

- ✓ Check for the proper installation of the electrical plug configuration.
- ✓ Check for the properly sized breakers for both the condensing unit and fan coil section.
- ✓ Is the cellar built with adequate insulation and vapor barriers?
- ✓ Are ducts installed above the ceiling or in accessible places properly sized before being covered?
- ✓ Is enough space available around the units for service and repair?

Installing the Fan Coil Unit

Wine Guardian fan coil units are typically installed indoors located near the cellar to minimize the duct runs. Each unit is provided with one entering or return air inlet and five possible supply air outlets. A maximum cumulative total length of flexible ductwork, for both supply and return ducts (including bends) of 25 feet is recommended. If longer runs are needed, use more than one supply opening to reduce the airflow in each duct by one-half, or install rigid ductwork that is typically less restrictive. Do not exceed 50 feet of total ductwork without using of booster fans. **See Recommended Flexible Ductwork Sizing Chart on page 28.**

Provide a three-foot clearance around the unit for removal of ductwork, or access for unit maintenance. If the humidifier is used, provide access space in front of it for service. (See separate humidifier manual.)

The fan coil unit can be located either above, or below the condensing unit in height. Wine Guardian strongly suggests that any height difference be kept as minimal as possible.

The fan coil unit is equipped with an On/Off switch, two communication ports, and an optional humidifier connection. One communication port is always used for the factory-supplied remote interface controller and is supplied with 50 feet of communication cable. The second communication port can be used for other factory options, such as remote temperature/humidity sensors.

IMPORTANT
The fan coil unit is supplied with a plastic control box that houses a control relay/contactor. The control box must be wired per supplied schematic to supply the 24 volt signal to energize the condensing (outdoor) unit on a call for cooling. Mount this control box in the most well protected location accessible to both the fan coil unit and condensing unit. Mounting it directly inside the housing of the condensing unit is recommended, if the installer concurs there is ample space to do so.

CAUTION

RISK OF PERSONAL INJURY OR DAMAGE TO EQUIPMENT
Check supporting structure for load bearing capacity to support the Wine Guardian.
All supports must be designed to meet applicable local codes and ordinances.
If in doubt, consult a qualified architect, engineer or contractor.

NOTE: Review Fig. 1 through Fig. 4 on the following pages before mounting the unit.

Floor Mounting

Mount the Wine Guardian fan coil on a plywood surface at least 12 inches above the floor to keep it away from water. Allow adequate space for the external drain.

Wall Mounting

If the unit is mounted onto a wall, provide adequate support on both ends of the unit to accommodate the weight of the system. Use knee braces to transfer the load of the unit to the wall. A shelf can be constructed to support the unit or a wall mount kit can be purchased through a Wine Guardian distributor.

Ceiling Mounting

Construct a structurally sound, level platform to place the unit on when hanging it from the ceiling joists. The Wine Guardian is NOT designed to be suspended from the top of the unit; it must be supported from the bottom. Angle brackets are available as an option for these types of applications. Place the unit on a platform to ensure that the unit is supported on all four corners. Leave adequate space on the top of the unit to remove the access doors for service.

In all cases the unit must be level to within plus or minus one-quarter inch end-to-end and plus or minus one-either inch side-to-side for proper operation. Locate the unit as close to the wine cellar as possible to reduce the length of the duct runs. If possible, use short and straight ducting on all ductwork runs.

Typical Mounting Arrangements

The following illustrations are suggested mounting arrangements. These illustrations are not intended to be complete and detailed installation drawings. For questions or help regarding installation, contact a Wine Guardian distributor or email (info@wineguardian.com) a sketch of the proposed area where the unit is to be installed.

Handling and Installation

1) Mount unit on solid, level surface.
2) Allow sufficient space for access to unit and accessories.
3) Provide proper electrical service.
4) Provide water to humidifier.
5) Install drain line with proper pitch.

Floor Mount

Supply air at ceiling, low wall return

Fig. 1

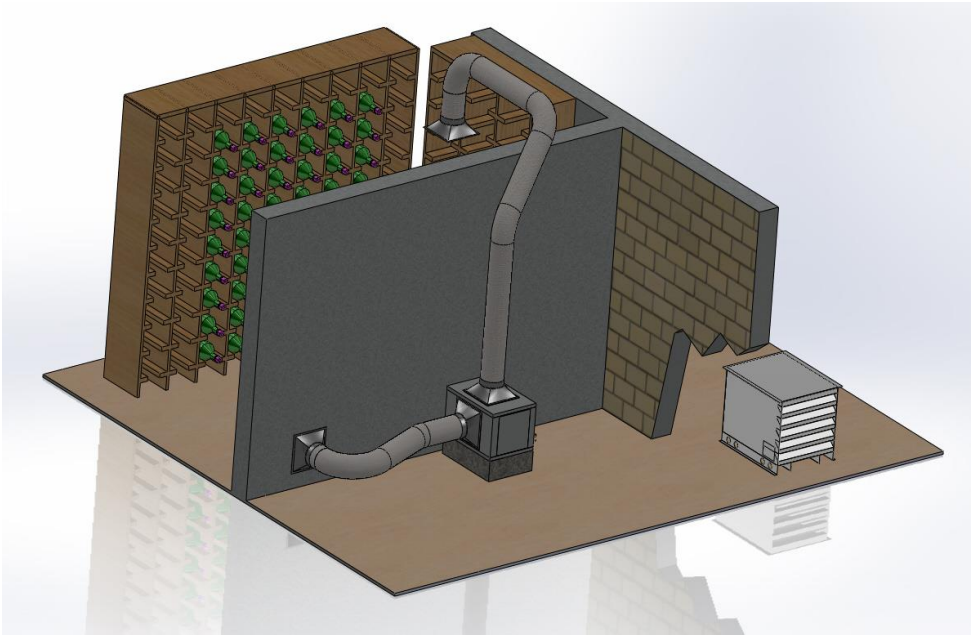

Rod Mount

Fig.2

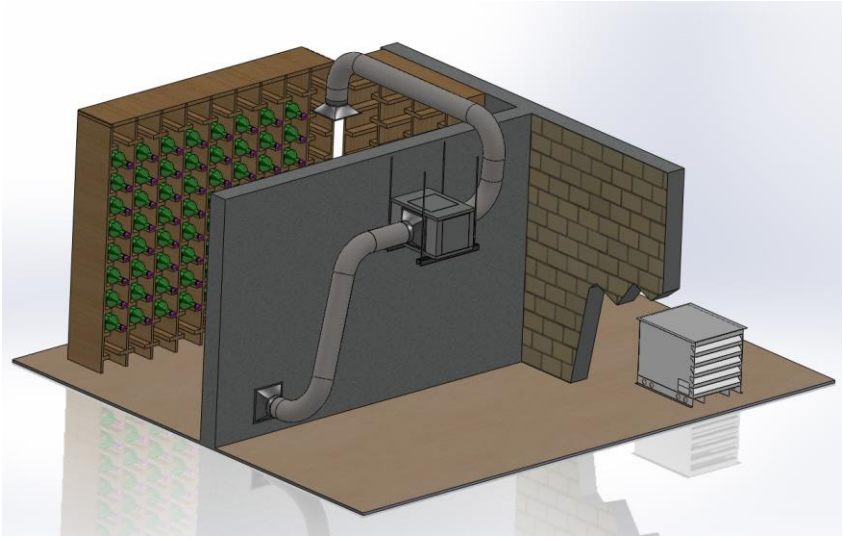

Shelf Mount

Fig. 3

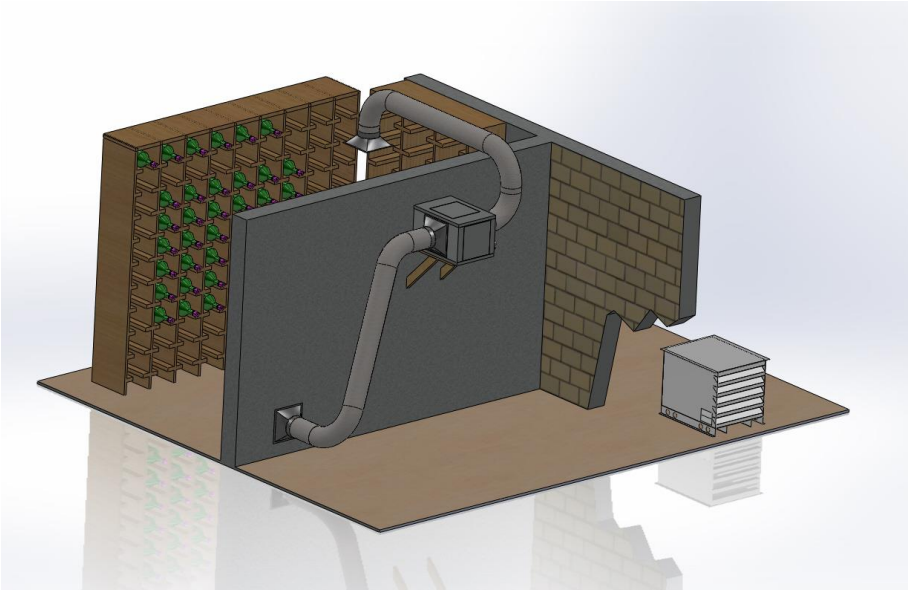

Optional ductwork connection on same wall

Fig. 4

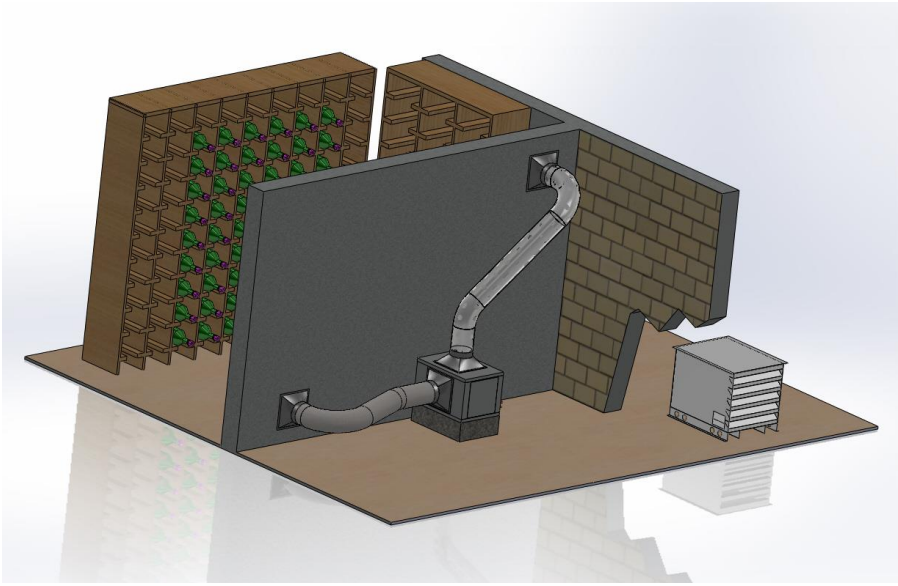

Installing the Ductwork and Grilles

Duct Collars

One inlet duct collar and one evaporator outlet are supplied with each fan coil unit as standard equipment from the factory. The duct collars are removable. The return air, or inlet duct collar must connect to the return air outlet from the wine cellar. Any of the five supply air outlets on the unit can be used for the ductwork to the supply grille(s) inside the wine cellar. The factory installed supply duct collar can be relocated to any of the five openings as needed.

Use ductwork to connect the unit to the supply and return outlets in the wine cellar. Use only insulated ductwork to minimize cooling loses, prevent sweating, and to reduce noise.

NOTE: Do not exceed a total of 25 feet for each length of ductwork run (supply and return).

Table 2

Recommended Insulated Flexible Ductwork Sizing Chart for the Evaporator (cooling) Coil			
Model#	**Outlet (supply air) Single**	**Outlet (supply air) Single**	**Inlet (Return Air) Single**
SS025	8”	6”	8”
SS050	10”	10”	10”
SS088	10”	10”	10”
SS200	12”	12”	12”

⚠ CAUTION ⚠

RISK OF DAMAGE TO EQUIPMENT

Avoid crimping the flexible ducts. This chokes down the inside area and reduces the airflow, causing the unit to operate erratically.

Be sure all ducts and surface in contact with the airflow are insulated and have a vapor barrier on the outside surface.

NOTE: Uninsulated ducts and surfaces cause bare exposed metal surfaces to sweat, further degradation of the insulation and a loss of equipment cooling capacity.

Location of Supply and Return Grilles

Locate supply and return grilles inside the cellar to create an airflow pattern that maximizes air circulation in the room. Avoid short circulating of the air.

- ✓ Do not install the return air grilles directly on the floor as the grilles will collect dust from the floor.
- ✓ Do not locate the supply or return air grille where there are blocked by bottles, boxes or cases.
- ✓ Do not locate the supply air grille where it blows directly on the remote interface controller.

General Duct Recommendation

- ✓ Support the flexible duct often to prevent sags or bends.
- ✓ Stretch the duct to make for a smoother interior for less air resistance.
- ✓ For a 90 degree bend, insert a metal elbow inside the flexible duct to avoid crimping.
- ✓ Do not squeeze or reduce the inside diameter of the ducts. This restricts the airflow.
- ✓ Use short and straight ductwork.
- ✓ Review the configuration schematic on the Overview sketch on page 11 for information about which panels are available for duct connections and service.
- ✓ Remove the panels or grilles from the openings to connect the ductwork.
- ✓ Check that all the fan blades move freely.
- ✓ Check for loose foreign objects in any of the air paths.
- ✓ Connect the round flexible ducts to the Wine Guardian using the duct collars provided with the duct accessory kit.
- ✓ Pull the outer plastic wrapping and insulation away from the end of the duct to expose the reinforced inside duct liner.
- ✓ Use tie straps of clamp around the **inside liner** to fasten the duct collar.

NOTE: Do not clamp around the outside insulation. It compresses and loosens over time.

- ✓ Secure the duct collar to the unit using the screws provided. Be careful not to damage or bend the gasket.

Reducing Noise from the Unit

Consider noise when locating the unit close to the cellar or an adjacent occupied space. A piece of one – or two-inch dense rubber or Styrofoam with foil face in between the unit and the wall absorbs and reduces the noise from the unit. In case of air noise use larger grilles or block the noise with a solid piece of wood or Styrofoam. Sound usually travels as a line of sight. Sound is reduced when it turns a corner, such as passing through a bend in ductwork. If the unit is supported from a wall or joist, place a rubber pad under the unit to reduce vibration transmission.

Installing the Condensate Drain Connection

The Wine Guardian unit provides dehumidification for the inside of the wine cellar. It cools the air down to the dew point corresponding to the temperature setpoint of the remote interface controller. If the vapor barrier of the wine cellar is poorly constructed or excess moisture is in the basement, the unit may remove excessive amounts of moisture from the wine cellar. The moisture appears in the condensate drain of the unit.

NOTE: If moisture becomes excessive, install a room type dehumidifier to dehumidify the basement so as to not overload your Wine Guardian.

Installing the Drain Line

- ✓ The drain line must extend from the unit to an external drain or disposal site. Do not use drain tubing any smaller than one-half inch inside dimension on the unit.
- ✓ Splice the drain extension onto the drain outlet with a sort piece of one-half inch copper tubing and secure with clamps.
- ✓ If no drain is available, use a bucket. Do not extend the drain below the rim of the bucket. Empty the bucket periodically.

The Wine Guardian unit is provided with a built-in drain trap. The drain trap creates a water seal to prevent air from backing up into the drain pan and causing the drain pan to overflow. Do not create secondary traps in the external drainline.

Allow enough height for the drain line to function properly. If draining into a nearby sink, the unit must be elevated higher than the rim of the sink in order for the water to drain by gravity. Install with a one-quarter inch per linear foot of pitch. **Do not** tie the condensate drain line directly into the sanitary sewer system. See Accessories and Optional Equipment on page 10 for information about the condensate pump.

Priming the Drain Trap

The internal drain trap primes itself automatically once the unit has run for a period of time and after the unit cycles off. This can be confirmed by water dripping from the drain.

Wiring the Fan Coil Unit for Power

DANGER

ELECTRICAL SHOCK HAZARD
RISK OF SERIOUS INJURY OR DEATH
The electrical outlet and wiring installation must meet the national and local building codes.

DO:

- ✓ Match the electrical wiring to the cord provided on the Wine Guardian.
- ✓ Provide dedicated circuit and wiring for the system.
- ✓ Match the wiring and breaker size to the rated load as shown on the serial plate and in this guide. See sample serial plate illustration below.

Model# SS088			**Serial# 11L18342**
Electrical	230/1/60	Electric Heat Amps	6.7
Evaporator Fan Amps	0.8	Humidifier Amps (opt.)	0.3
Total Unit Amps (w/o opt.)	0.8	Crankcase Htr. Amps.	0.2
Min. Circuit Amps (w/o opt.)	1		
		Refrigerant	R-134-A
		Test Pressure	275psi

Air Innovations, 7000 Performance Drive, North Syracuse, New York 13212
Ph:800-535-3295 * 315-452-7400 * Fax: 315-452-7420

.

DO NOT:

- ✓ DO NOT MODIFY THE PLUGS IN ANY WAY!
- ✓ Do not use extension cords.

IMPORTANT
***The electrical power supply must be either 115 volt or 230 volt AC 1 phase 60 cycle, depending on the model of the unit, and cannot vary* more than plus or minus 4% or damage may occur to the unit.**

Plug the unit into the wall outlet. Gently pull on the plug to make sure it is tight.

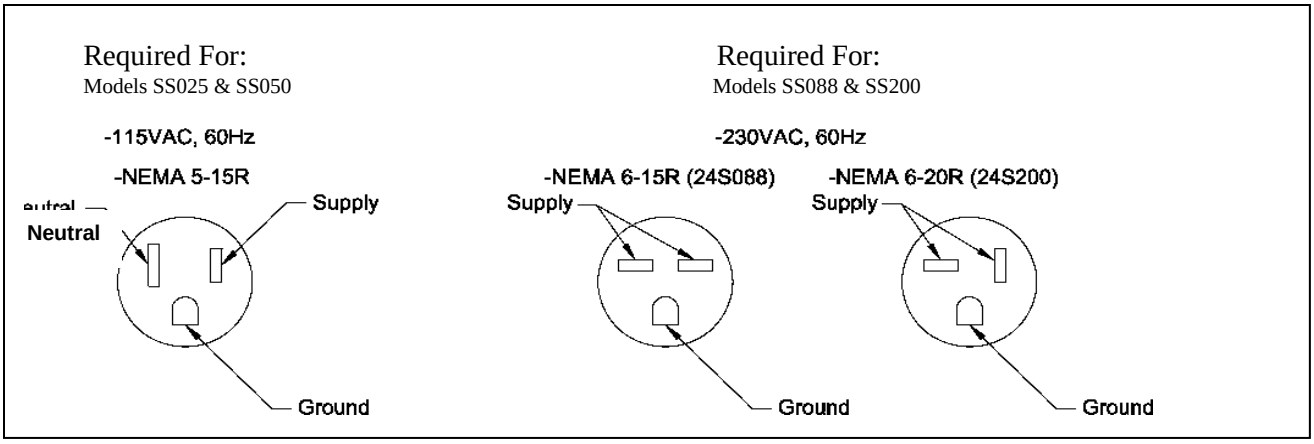

Installing the Condensing Unit

- Condensing units are factory assembled with a sheet metal outdoor hood for protection from the elements.
- A minimum of 12 inches is required around the perimeter of the condensing unit for proper airflow across the coil, and to provide an adequate discharge airflow path through the louver section. Any obstructions to this airflow will result in a decrease in performance, and possibly premature failure due to a buildup of high pressure within the system.
- The condensing unit is designed to operate in ambient temperatures ranging from 0 degrees F to 115 degrees F, as it is supplied with many standard features to assist full operation in this wide range.
- Mount the condensing unit above normal snowfall levels, so as to allow uninhibited winter operation. A build up of snow or any obstruction to airflow will result in a decrease in performance and possible premature failure due to an increasingly high pressure within the system.

Installation of Interconnecting Refrigerant Lines (Suction and Liquid)

NOTE: The interconnecting copper refrigerant lines shall be supplied by the installer. The larger suction line must be fully insulated along its complete length from condensing unit to fan coil unit. There is a factory-installed liquid line filter-drier inside the condensing unit; therefore no additional drier is needed for proper operation. A liquid line moisture/sight glass is factory installed in the condensing unit to assist in monitoring the refrigerant charge, and the state of the refrigerant in the system.

- Keep horizontal and vertical distances between the indoor and outdoor section as close as possible to minimize refrigerant charge required. This will reduce system issues related to oil management that can impair performance and jeopardize the compressor's lubrication.
- Provide a one-inch pitch in suction and liquid line toward the evaporator for every 10 feet of run to prevent any refrigerant that condenses in the suction line from flowing to the compressor when the unit is off. These two lines can be routed together and wrapped together, as long as the suction line is fully insulated as previously directed.
- Suction line riser traps are not required if the riser is properly sized to maintain refrigerant velocity. Adding a trap will only increase pressure drop.
- Prevent dips, sags, or other low spots that will trap refrigerant oil, which is an issue especially with long horizontal runs. Use hard refrigerant copper for longer horizontal runs to prevent potential oil return problems. (see sample piping chart on page 34)
- When sweat connections are made in the connecting lines, be sure that the inside of the tubing is clean before installing the unit. Use a dry nitrogen bleed during brazing. Note that compressor suction and discharge valves should be open to atmosphere no longer than 15 minutes. Compressors with POE (polyolester) oil will quickly become contaminated when opened to atmosphere. On any installation, the use of a suction line filter, liquid line filter drier and moisture indicator is recommended. If the suction line is larger than one-

quarter inch, a vibration eliminator should be installed close to the motor compressor in a horizontal parallel to the compressor, crankshaft or in a vertical position 90 degrees to compressor crankshaft.

NOTE: The suction line should be clamped near the inlet end of the vibration eliminator. The vibration eliminator is located between the clamp and the compressor.

Split System Interconnecting Line Sizing Chart

Table 3

Model	Liquid Line(OD)	Liquid connection at evaporator (OD)	Suction line (OD)	Min. Suction line insulation thickness (in)	Suction connection at evaporator (OD)	Maximum "total" line length	Maximum lift (height)
SS025	1/4"	1/4"	3/8"	3/8"	3/8"	50'	15'
SS050	1/4"	1/4"	1/2"	3/8"	***3/8"**	50'	15'
SS088	3/8"	***1/4"**	1/2"	5/8"	1/2"	**50'**	**15'**
SS200	3/8"	3/8"	7/8"	5/8"	***1/2"**	**50'**	**15'**

***Interconnecting tube must be reduced down at evaporator connection**

Notes:

- ***Line lengths are expressed in equivalent feet = actual run length + fitting allowances (i.e. ~5' for each bend/elbow allowance).***
- ***Use only refrigeration grade dehydrated tubing.***
- ***Install refrigeration piping per local codes and ASHRAE guidelines.***

Sample Piping Configurations

Incorrect Installation

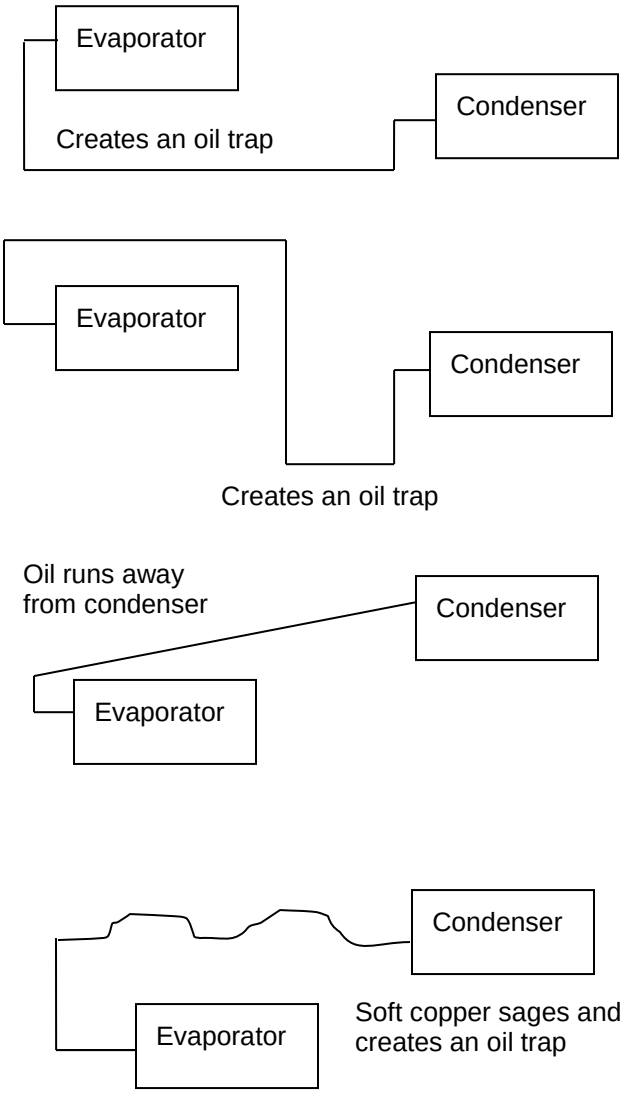

Correct Installation

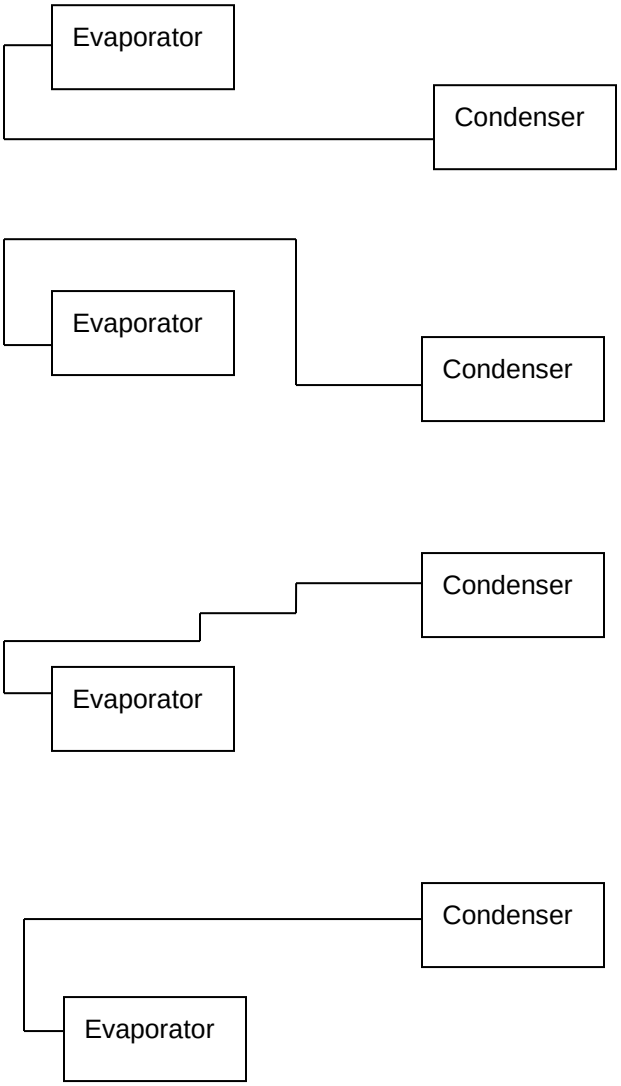

Leak Checking and Evacuation Process

WARNING

ALL COMPONENTS CHARGED WITH DRY AIR MUST BE EVACULATED BEFORE CHARGING WITH REFRIGERANT

- Purge the dry air charge from the unit by opening the liquid line shut-off valve or removing the liquid line outlet fitting or plug, whichever is applicable for your particular unit. Connect the suction and liquid lines to the unit.
- Pressurize and leak test the entire system including the condensing unit, evaporator and all connecting tubing, fittings, and brazed joints using the intended operating refrigerant for leak testing. A pressure equal to the low side test pressure marked on the unit nameplate is recommended for leak testing. Repair any leaks found. Connect a good vacuum pump to both the low and high side evacuation valves (if provided) with copper tube or high vacuum tube (three-eighths inch inside diameter minimum) and draw a deep vacuum of at least 15pp microns. Do not use the motor compressor to pull a vacuum and do not operate the motor compressor in a vacuum. Break the vacuum with nitrogen.
- Evacuate the system to hold at 500 microns and break the vacuum with refrigerant. Remove the vacuum pump. The system is now ready for charging. Charge the system with the correct amount of refrigerant and mark the amount, with a ballpoint pen, in the space provided on the unit nameplate.

NOTE: When charging through the suction service valve the refrigerant should be charged in vapor form. NEVER CHARGE IN LIQUID FORM. Refrigerant should always be charged through a dryer. Charging in liquid form may damage the valve plate assembly as well as scrub the oil out of the compressor bearings.

WARNING

NON-AZEOTROPES MUST BE CHARGED IN THE LIQUID PHASE ONLY. TO AVOID COMPRESSOR DAMAGE, LIQUID MUST ALWAYS BE CHARGED INTO THE HIGH SIDE OR INTO AN ACCUMULATOR.

NOTE: Be sure there is not an overcharge of refrigerant. An overcharge might permit liquid refrigerant to enter the motor compressor and damage the valves, rods, pistons, etc.

Wiring

- Wire the system as per the supplied wiring schematic found on pages 14 through 16 of this manual.
- The fan coil unit is powered through a factory-supplied power cord, but you will need to run 24 volt power wires from the two position terminal block to the field installed enclosed contactor (in plastic housing) to be placed in the condensing unit, or to somewhere adjacent that is easily accessible. This can be typical remote interface controller wire or 18 gauge insulated wire. (see Fig.1 and 2 on the following page)

Fig. 1

Fig. 2

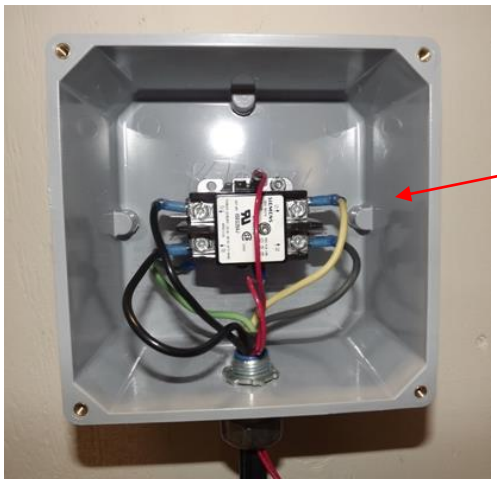

- The condensing unit needs to be hard-wired for the rated high voltage to be brought to the field-installed contactor in enclosed plastic housing, from the load side (L1 & L2) of the contactor. Run a ground lead to be connected to the condensing unit Ground lead at the compressor. The load side of the field installed contactor will contain the power leads that are found under the condensing unit's control box cover.
- Turn on power to the condensing unit 24 hours prior to system start-up to allow crankcase heater to warm up compressor crankcase.

Refrigerant Charging

NOTE: The SS025, SS050, SS088 systems utilize a Headmaster control valve to control head pressure at low ambient applications, therefore require a specific initial charging procedure as outlined below. The SS200 system does not use this method of low ambient control (utilizes fan cycling), but can accept initial charge into the liquid receiver port the same way and the system has the same capacity.

Determining the amount of charge – When "refrigerant side" head pressure control is utilized on a system, one of the most important factors is determining the total system refrigerant charge. While on most packaged units the amount of charge is listed on the unit, the required charge for a field built-up system cannot be listed by the manufacturer. Charge is usually added when the system is started up until "proper" system performance is reached. However, this is not satisfactory and if the system is to function properly year-round, the correct amount of extra charge must be calculated ahead of time.

Procedures for Charging System with Head Pressure Control

(SS025, SS050, SS088)

NOTE: When charging any system with head pressure control the outdoor ambient temperature must be known.

Charging of Systems with Head Pressure Control in ambients above 70 degrees F (After normal evacuation procedures):

1. Connect refrigerant cylinder to a charging or gauge port on the receiver outlet valve.
2. Open the receiver valve approximately one-half way (so receiver and liquid line are connected to charging or gauge port).
3. Charge liquid refrigerant into the high side of the system. Weighing the charge is recommended.
4. Remove the refrigerant drum and connect it to the suction side of the compressor.
5. Charge refrigerant vapor into the low side. Do not allow **liquid** refrigerant into the low side.
6. Start the system.
7. Observe sight glass (at receiver outlet) to see if system is filling with refrigerant for normal refrigeration cycle.

CAUTION

BUBBLES IN THE *SIGHT GLASS* CAN BE CAUSED BY FLASHING DUE TO PRESSURE DROP FROM PIPE OR ACCESSORY LOSSES, ETC.

8. If the **Sight glass** shows bubbles, more refrigerant may be required, while allowing sufficient time for the refrigerant to stabilize and clear the **Sight glass.** Use supplied information on the following pages for proper final charge.

Charging of Systems with Sporlan Head Pressure Control in ambients below 70 degrees F (After normal evacuation procedures):

NOTE: When charging in ambient below 70 Deg. F the procedure is very critical. Be sure to adhere to the following steps. Failure to do so will result in overcharging the system.

1. Follow instructions 1 through 7 above.
2. If the valve setting is correct for the system being charged, it is quite likely that some refrigerant will be backed up into the condenser and the **Sight glass** will indicate bubbles in the liquid line.
3. Add more refrigerant, while allowing sufficient time for the refrigerant to stabilize and clear the **Sight glass.** Use supplied information on the following pages for proper final charge.
4. At this point the system is correctly charged for this type of head pressure control at the ambient temperature that exists while the charging procedure is taking place.
5. If the system is designed to operate at ambient below the ambient that exits during charging, additional charge may have to be added now.

Since good system performance during low ambient operation depends on proper refrigerant charge, it is very important that this phase of the installation procedure be done carefully. Many times, poor system performance will be due to too little or too much charge. And in many cases, this will be the last item suspected.

With the system started

- After following instructions on the previous page on initial Charging for Systems with Head Pressure Control, with refrigerant tank now connected to suction line (low side) port to add remaining charge in a gas state, refer to the provided charts for proper system operating points as equated to ambient temperature with wine cellar at normal conditions of 57 degrees F / 55%RH. Refer to Split Systems Operations chart on page 39 for system pressures, sub-cooling, and superheat values to allow you to charge your system correctly.

- In addition to using the charts provided, there is a liquid line moisture/sight glass located in the condensing (outdoor) unit that will assist you in knowing that you have sufficiently charge your system, HOWEVER a full sight glass or a glass with bubbles does not necessarily mean you are properly charged, or undercharged. There may be other factors affecting sight glass, so do not charge by sight glass method only. A full sight glass- matched with proper system pressures, sub-cooling, and superheat values is the proper method for confirming that the system charge is correct for your application.

If you are not sure how to measure superheat or sub-cooling:

Superheat

- Get an accurate suction line temperature on the suction line as close to the compressor inlet as possible. At same time, attach a compound pressure gauge set to the system so as to read the low side suction pressure at the suction service valve port (back seated valve stem to allow un-restricted refrigerant flow from evaporator back to the compressor). Convert suction pressure to a saturated temperature as derived from a pressure/temperature chart. Since the suction line temperature is the higher value, subtract the saturated temperature from it to derive your superheat. If your wine cellar is already at specified conditions (e.g., 57 degrees F, 55% RH), and if your superheat is very low, or zero, you may have overcharged your system.

Sub-Cooling

- With your compound pressure gauge set still installed with the high side connect to the valve port on the liquid receiver (back seated valve stem to allow un-restricted refrigerant flow from condenser to evaporator). Convert this liquid pressure to a saturated temperature from pressure/temperature chart. Next, obtain your liquid line temperature by getting an accurate reading on the liquid line BEFORE the TXV expansion on the indoor side. Obtain this temperature entering the evaporator unit. Subtract the liquid line temperature from the saturated liquid temperature to derive the system sub-cooling.

When comparing your high side system pressure to supplied charts below, refer to the liquid line pressure.

To give you an idea on how much R134A refrigerant charge you may require to reach full charge for your given interconnecting line length, see the very general guidelines below based on liquid line size:

SS025, SS050 1/4” OD ~ .50 ounce/foot
SS0088, SS200 3/8” OD ~ 1.0 ounce/foot

**Based on factory testing using 25 feet of interconnected piping

SS025 = 35 ounce total charge
SS050 = 39 ounce total charge
SS088 = 60 ounce total charge
SS200 = 73 ounce total charge

Split System Operations Chart

OD Ambient (F)	Suction (psig)	Discharge (psig)	Superheat (F)	Sub-cooling (F)
10	21	86	3	15
40	25	102	9	16
60	31	105	8	24
70	31	106	12	24
80	32	120	16	21
100	34	164	24	27
115	35	198	28	35

SS050

OD Ambient (F)	Suction (psig)	Discharge (psig)	Superheat (F)	Sub-cooling (F)
10	24	86	5	20
40	26	102	5	16
60	28	109	5	17
70	27	114	11	22
80	27	134	13	25
100	27	179	22	30
115	28	215	27	33

SS088

OD Ambient (F)	Suction (psig)	Discharge (psig)	Superheat (F)	Sub-cooling (F)
15	22	98	5	15
40	23	95	5	17
60	25	108	8	20
70	27	130	10	22
80	28	146	17	24
100	30	193	20	28
115	33	230	23	30

SS200

OD Ambient (F)	Suction (psig)	Discharge (psig)	Superheat (F)	Sub-cooling (F)
15	*25 (avg.)	*107 (avg.)	*5 (avg.)	*11 (avg.)
40	*27 (avg.)	*112 (avg.)	*5 (avg.)	*11 (avg.)
60	28	106	8	5
70	28	123	15	10
80	29	123	13	10
100	30	141	14	10
115	31	210	25	15

Table 4

Installing the Remote interface controller and Communication Cable

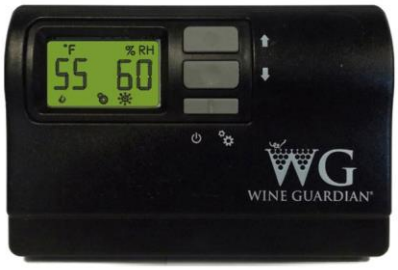

The Wine Guardian remote interface controller is a combination temperature and humidity controller with single stage cooling, heating and humidifier control. Each Wine Guardian unit is supplied with a remote interface controller and 50 feet of communication cable. It is wired at the factory for testing prior to shipment.

In most applications the remote interface controller will be mounted within the wine cellar. The remote interface controller can also be mounted directly outside of the wine cellar or in any other room of the home or building. When mounted outside of the wine cellar, a remote sensor kit must be purchased and installed within the wine cellar. See below for remote sensor installation details.

IMPORTANT

Wine Guardian units are supplied with 50 feet of Cat 3, 6-wire twisted pair communication cable with RJ-11 connectors. Failure to use this type of communication cable WILL cause product damage and WILL void any equipment warranty. Installation instructions should be followed CAREFULLY as improper splicing and/or joining of twisted pair cables can cause equipment failure.

Mounting the Remote Interface Controller

Fig. 1

1. Disconnect the communication cable from the side of the Wine Guardian unit and the remote interface controller. (Fig. 1)

   a) Install the communication cable within the wall and/or ceiling structure of the wine cellar to the desired controller mounting location.

   b) Mount the remote interface controller on a solid surface away from doors, corners, air outlets, drafts or heat generating equipment. Do not mount the remote interface controller directly on an outside wall or wall adjacent to a boiler room.

Fig. 2

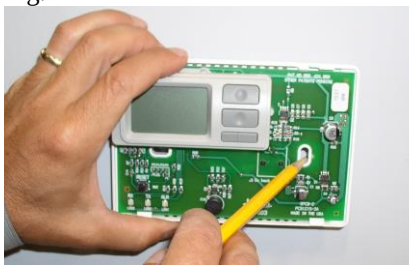
Fig. 3

Fig. 4

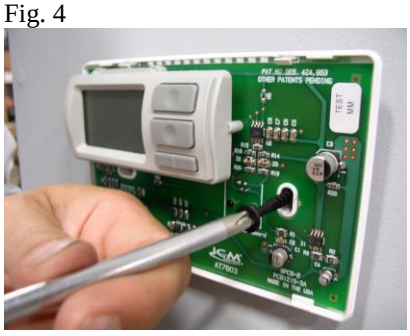
Fig. 5

Fig. 6

2. Remove the back plate of the controller and mark the mounting points at the desired location. (Fig. 2)

   a) Mark the location of the communication cable connection as this area will require sufficient clearance, for instance, a 1½” hole in the wall for flush mounting of the back plate. (Fig. 3)

3. Drill two 1/8” holes and insert anchors (provided) within the mounting surface. Anchors may not be required if securing to a wall stud or racking system.

4. Plug in the communication cable to the back of the remote interface controller backing plate. (Fig .4)

   a) Attach backing plate to wall using the two screws provided with the system. (Fig .5)

5. Re-install plastic face plate on to backing plate.

6. Re-attach the communication cable to the side of the Wine Guardian cooling unit. (Fig. 6)

Installing the Wine Guardian Remote Sensor

The remote sensor is a combination temperature and humidity sensor only. It is designed to be mounted within the wine cellar and can be used in combination with the remote interface controller or up to three additional remote sensors to read and control multiple areas within the wine cellar. (Fig. 1)

****** The remote sensor is now only available in black *******

Fig. 1

Mounting the Remote Sensor

Fig.2

1. Disconnect the communication cable from the side of the Wine Guardian unit and the remote sensor. Install the communication cable within the wall and/or ceiling structure of the wine cellar to the desired controller

IMPORTANT
A splitter device has been supplied in the remote sensor kit. The splitter device must be mounted at the Wine Guardian unit as shown. DO NOT mount the splitter device at the back of the remote interface controller or to the back of the remote sensor as this WILL cause component or system damage.

Fig.2

2. Mount the remote sensor on a solid surface away from doors, corners, air outlets, drafts or heat generating equipment. Do not mount the remote sensor directly on an outside wall or wall adjacent to a boiler room. Use a piece of foam insulation behind the sensor to insulate it from a hot or cold surface. The recommended height is 4 to 5 feet above the finished floor.
3. Remove the sensor cover plate by removing the two Allen head screws at the top of the cover using the Allen head wrench provided in the kit. (Fig.2) Mark the mounting points at the desired location within the wine cellar. Also mark the location of the communication cable connection as this area will require sufficient clearance, for instance, 1½” hole in the wall for flush mounting of the sensor plate.

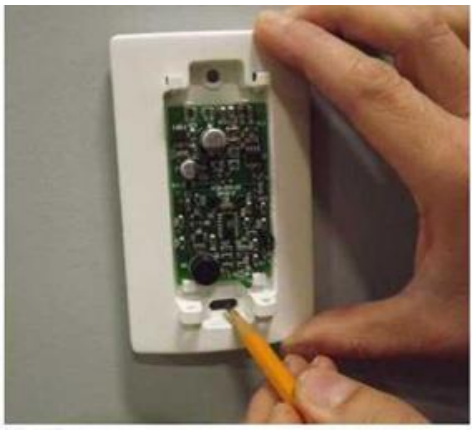

Fig.3

4. Drill two 1/8” holes and insert anchors (provided) within the mounting surface. Anchors may not be required if securing to a wall stud or racking system. (Fig. 3)

Fig 4

5. Plug in the communication cable to the back of the remote sensor and attach to the wall using the two screws provided in the kit. (Fig. 4)

Fig.5

6. Plug the remote sensor cables into the splitter device at the Wine Guardian unit along with the communication cable for the remote interface controller. (Fig. 5)

NOTE: If using multiple remote sensors in one wine room, continue to mount the remaining sensors before installation of the sensor cover plates. When multiple sensors are used, the sensor jumper position must be adjusted in order for proper averaging of temperature and humidity readings. See page 44 for jumper set up.

Fig. 6

****** The remote sensor is now only available in black *******

Joining the Communication Cable

IMPORTANT
Wine Guardian cooling systems are supplied with 50 feet Cat 3 of 6-wire, twisted pair communication cable with RJ11 type connectors. Caution must be taken when connecting two lengths of communication cable (splicing) to ensure uniform wire color before and after splice. An RJ11 Modular 6 wire STRAIGHT THROUGH type coupler is the ONLY coupler approved for splicing Wine Guardian twisted pair communication cable.

Changing Jumper Positions

(Averaging readings from remote sensor)

Jumper position 1

Jumper position 2

Jumper position 3

If using multiple remote temperature/humidity sensors in your application, refer to the photos showing the need to change the jumper locations internal to the control board on each remote sensor (up to three maximum).

For the control to average all of the sensors utilized (if more than one), the jumper must be in different positions on the pins.

There three pin settings. To access the jumper:

1. Remove the two-set screws holding on the plastic cover. This procedure allows the control to go to each remote sensor in sequence to average. Failure to perform this procedure will result in the system reading only one sensor and not the average of multiple sensors.

NOTE: If multiple sensors control the Wine Guardian unit, change factory default in configuration setting 10 to "averaging." Obtain access code from Air Innovations' service department to use in configuration 8 to reach configuration 10.

Standard Controller Functions

.

How to:		
Turn system on/off		• Press the "On/Off" button once. **Note: There is a five (5) minute time delay before the system turns on or turns off.** ***** Green LED lit when unit is on**
Change Temperature		• Press the "Up" arrow once. The display will show the existing temperature set point. • Press the "Up" or "Down" arrow buttons to adjust the temperature to the desired setpoint.
Change Humidity		• Press the "Up" arrow once. This display will show the existing temperature setpoint. • Press the "Settings" button once to display the "Humidity" setpoint. • Press the "Up" or "Down" arrows to adjust the humidity to the desired set point. **Note – a Wine Guardian humidifier must be installed and Setting 6 set to "1" or "2" before the controller will let you change percent humidity..**

Settings – Press and hold the "Settings" button for five (5) seconds to access the following settings.

Deg F or Deg C		**Setting 1** • Press the "Down" arrow to change temperature from Deg F to Deg C. • Press the "Up" arrow to change temperature from Deg C to Deg F.
Low temperature alarm set point		**Setting 2** • Press "Settings" button to advance to Setting 2. • Press the "Up" or "Down" arrow buttons to adjust to the desired setpoint. Factory default is 50 Deg.F (10 Deg C).
High temperature alarm set point		**Setting 3** • Press "Settings" button to advance to Setting 3. • Press the "Up" or "Down" arrow buttons to adjust to the desired setpoint. Factory default is 65 Deg F (18 Deg C).
Low humidity alarm set point	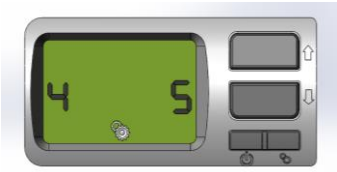	**Setting 4** • Press "Settings" button to advance to Setting 4. • Press the "Up" or "Down" arrow buttons to adjust to the desired setpoint. Factory default is 5%.
High humidity alarm set point		**Setting 5** • Press "Settings" button to advance to Setting 5. Press the up or down arrow buttons to adjust to the desired setpoint. Factory default is 95%.
Add or remove humidifier		**Setting 6** • Press "Settings" button to advance to Setting 6. • Press the "Up" or "Down" arrow buttons to adjust to the desired setpoint. Factory default is zero (0). Zero (0) = No humidifier One (1) = Integral Wine Guardian mounted humidifier Two (2) = Stand-alone remote mounted humidifier
Fan AUTO or ON	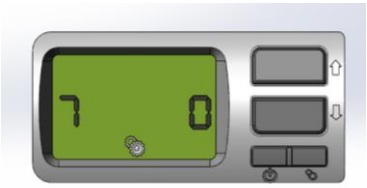	**Setting 7** • Press "Settings" button to advance to Setting 7. • Press the "Up" or "Down" arrow buttons to adjust number to the desired set point. Factory default is zero (0). Zero (0) = Auto – fan only turns on when there is a call for cooling or heating One (1) = Fan On – fan remains on continuously

Advanced Settings--	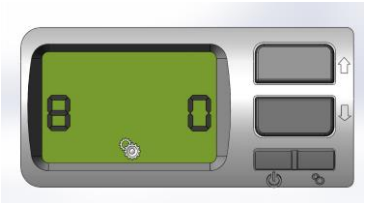	**Setting 8** • Press “Settings” button to advance to Setting 8. • Press the up or down arrow buttons to adjust number to the access code 12. Press “Mode” button to continue onto setting 9 through 19.
Compressor anti-short cycling time		**Setting 9** • Press “Settings” button to advance to Setting 9. • Press the “Up” or “Down” arrow buttons to adjust to the desired time in one-minute increments. Maximum is 10 minutes, minimum is 0 minutes. Compressor anti-short cycling time is the amount of allowable time between compressor stop and restart. Rapid start/stop of compressors can cause premature failure. Factory default is 5 minutes. **WINE GUARDIAN DOES NOT RECOMMEND SETTINGS LOWER THAN FACTORY DEFAULT.**
Set up remote sensor or remote interface controller		**Setting 10** • Press “Settings” button to advance to Setting 10. • Press the “Up” or “Down” arrow buttons to adjust to the desired setting. rS = Remote sensor rI = Remote interface LI= Local interface – Through-the-wall unit only A = Averaging – Jumper position within sensors must be adjusted. See page 44.
Enable or disable defrost sensor input		**Setting 11** • Press "Settings" button to advance to Setting 11. • Press the “Up” or “Down” arrow buttons to adjust to the desired setpoint • 1 will equal enabled and a 0 (zero) will equal disabled.

Defrost cut in temperature		**Setting 12** • Press "Settings" button to advance to Setting 12. • Press the “Up” or “Down” arrow buttons to adjust to the desired setpoint • This setting will be adjustable from 25 Deg F to 40 Deg F (4 Deg C - 5 Deg C). Default will be 35 Deg F (2 Deg C). • There must be at least a 1 Deg F/C difference between defrost cut in and cut out set points.
Defrost cut out temperature.		**Setting 13** • Press "Settings" button to advance to Setting 13. • Press the “Up” or “Down” arrow buttons to adjust to the desired setpoint. • This setting will be adjustable from 35 Def F to 50 Deg F (2 Deg C - 10 Deg C). Default will be 40 Deg F (5 Deg C). • There must be a least a 1 Deg F/C difference between defrost cut in and cut out set points. **Note: This setpoint must be 1 Deg F/C higher than setting 12.** **Note: If C is selected and then switched back to F the default cut out will change to 41 Deg F.**
Compressor run time setting for defrost.		**Setting 14** • Press "Settings" button to advance to Setting 14. • Press the “Up” or “Down” arrow buttons to adjust to the desired setpoint. • The setting for compressor run time can be adjustable from 1 to 12 hours in 1 hour increments. Default will be 1 hour.
Room sensor calibration		**Setting 15** • Press “Settings” button to advance to Setting 15. • Press the “Up” or “Down” buttons to adjust to the desired set point. Maximum setting is +5, minimum setting is -5. Factory default is zero (0). Sensor calibration set point changes the actual display reading (temperature only) by the value of this setting. Example: Sensor reading = 55 Deg F Setting 15 set to +4 Display reading = 59 Deg F

RH% Sensor Calibration		**Setting 16** This setting will allow the adjustment of RH% reading by +/-10%. Factory default is 13%RH.
Differential temperature adjustment		**Setting 17** • Press "Settings" button to advance to Setting 17 • Press the "Up" or "Down" buttons to adjust to the desired setpoint. This setting changes the system/compressor; turn on temperature above setpoint. Factory default is set to 1 Deg F. Example: Sensor reading = 55 Deg F Setting 17 Set to +3 Deg F System/compressor turns on at 58 Deg F.
Deadband setting		**Setting 18** • Press "Settings" button to advance to Setting 17. • Press the "Up" or "Down" buttons to adjust to the desired setpoint. This setting is the minimal allowable temperature difference between heating and cooling setpoints. Maximum is 5 Deg F, minimum is 1 Deg F. Factory default is set to 2 Deg F
Test mode setting	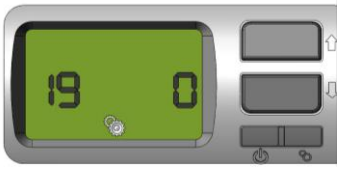	**Setting 19** • Press "Settings" button to advance to Setting 7. • Press the "Up" or "Down" buttons to adjust to the desired setpoint. When set to one the controller will automatically turn on all outputs with the exception of electric heat. Factory default is zero. Zero (0) = Off. One (1) = On
System Selection		**Setting 20** • **DO NOT CHANGE**

Alarm Codes

High temperature alarm **Flashing temperature number**		Press the "Up" or "Down" arrow once to change screen from alarm to normal temperature and humidity indication. "Flashing temperature number" along with flashing (!) symbol will remain on screen until temperature falls below the High Temperature Alarm set point (Setting 3).
Low temperature alarm **Flashing temperature number**		Press the "Up" or Down" arrow once to change screen from alarm to normal Temperature and humidity indication. "Flashing temperature number" along with flashing (!) symbol will remain on screen until temperature rises above the Low Temperature Alarm set point (Setting 2).
High humidity alarm **Flashing humidity number**		Press the “Up” or “Down” arrow once to change screen from alarm to normal Temperature and Humidity indication. "Flashing humidity number" along with flashing (!) symbol will remain on screen until humidity falls below the High Humidity Alarm setpoint (Setting 5).
Low humidity alarm **Flashing humidity number**		Press the “Up” or “Down” arrow once to change screen from alarm to normal Temperature and Humidity indication. “Flashing humidity number” along with flashing (!) symbol will remain on screen until humidity rises above the Low Humidity Alarm set point (Setting 4).
!1 = High Pressure Switch Fault		**THIS ALARM FORCES THE SYSTEM TO SHUT DOWN** ◦ **This alarm forces the system to shut down** Press the “Up” or “Down” arrow once to change screen from alarm to normal Temperature and Humidity indication. “!1” will remain on screen until the High Pressure reset switch has been reset. See the trouble shooting guide page 60 for “Instructions to Reset High Pressure Switch”
!2 = CS (Condensate Switch Fault)		**THIS ALARM FORCES THE SYSTEM TO SHUT DOWN** **This alarm forces the system to shut down** Press the “Up” or “Down” arrow once to change screen from alarm to normal Temperature and Humidity indication. “!2” will remain on screen until the CS (condensate switch) fault is resolved and reset

Inspection and Start Up Checklists

Receiving and Inspecting

☐ Unit received undamaged

☐ Unit received complete as ordered including accessories

Handling and Installing

☐ Unit mounted on solid level surface

☐ Sufficient space allowed for access to unit and accessories ▫ Proper electrical service provided

☐ Water provided to humidifier

☐ Drain lines and trap installed properly

☐ Ductwork, fittings and grilles installed properly

☐ All cold duct surfaces insulated

☐ No obstructions to air flow around condensing unit

Starting-up the Unit

☐ General visual inspection looks good. All wiring connections checked

☐ All ducts, grilles and panels in place

☐ Start unit

☐ Check ducts and connections for air leaks

☐ Balance air distribution

☐ Confirm condenser airflow is unrestricted

☐ Verify cooling and heating operation

☐ Check for excessive noise or vibration

Starting-up and Operating the Wine Guardian Split System

Now that the installation is complete, check to make sure all ductwork and electrical connections are secure.

Replace all panels that were removed during installation. Check that all of the openings in the unit are covered with a blank panel, a ductwork connection or a grille.

⚠ CAUTION ⚠

RISK OF PERSONAL INJURY
COVER ALL OPENINGS OF THE UNIT TO PREVENT A HAND OR FINGER FROM ACCESS INSIDE THE UNIT.

Turn on the Unit

Plug in the unit. Turn on the rocker switch on the side of the unit. The rocker switch lights up to indicate power to the unit. The unit may not come on right away due to the timer built into the circuiting to prevent short-cycling.

Testing the Fan

(Configuration Setting 7)

Factory default is "AUTO" fan operation. To change the fan setting, refer to page 46 of this manual.

- ✓ ON means the fan runs continuously and indicates that the power is on and the control circuit is energized and operating.
- ✓ AUTO means the fan runs only when the remote interface controller is calling for cooling, heating, or the humidistat is calling for humidification.

Running the Unit

- ✓ Check unit to confirm the compressor is running, such as the hum of the compressor or cool air leaving the unit.
- ✓ Check for any unusual noise or vibration, such as clanking or rubbing.

Initially, the unit may run continuously for several hours, up to a day or more, while it lowers the cellar temperature. Once the unit reaches the setpoint temperature, it shuts off and starts to cycle on and off as it continues to lower the bottle temperature to the setpoint. The cellar air reaches set point before the bottles. If the cellar temperature started at 75 degrees the supply air temperature discharged from the unit will probably be 15 degrees to 20 degrees colder. As the cellar temperature decreases to 55 degrees, the supply temperature differential decreases 8 to 12 degrees colder.

NOTE: The remote interface controller will show a "Hi Temp" fault until the wine cellar temperature falls below 65 degrees. See page 49 for Hi Temp Alarm details.

Cycling the Unit

The fans continue to free-wheel for several minutes when the unit cycles off. This is normal. The unit is furnished with a low ambient control so the condenser fan also cycles on and off during cooling. This maintains the head pressure on the compressor under low ambient conditions, and is normal. The bottom of the compressor stays warm even when the unit is off to keep the lubricating oil warm and separated from the refrigerant.

Setting the Remote Interface Controller

Normal settings are between 54 and 58 degrees. If the optional heating coil is furnished, enter a separate temperature setting to maintain the lower setting. To prevent the unit from short cycling, the setting between heating and cooling cannot be closer than three degrees.

Regulating the Wine Cellar Temperature

Wine cellars have a natural temperature gradient of approximately 5 to 10 degrees between floor and ceiling. To increase or decrease the temperature in various zones, change the air flow patterns.

To keep the entire wine cellar at the same temperature, set the remote interface controller to run the supply fan continuously and not just when the cooling is operating. Set fan switch to ON instead of AUTO.

NOTE: To monitor the Cellar Temperature, place thermometers in various locations in the cellar to monitor the temperature zones. Change the temperature in various zones by shifting the air flow patterns.

Changing the Air Flow Direction

The optional grilles furnished with Wine Guardian are single directional. Rotate the grilles to change the direction of the air flow.

When using multiple supply ductwork, it is necessary to balance the air flow between the ductwork. If too much air flows though one duct but not enough air flows from the other duct, install a damper or other restriction into the duct with too much air. That will force more air to flow out the other duct.

Maintenance

General

WARNING

BEFORE PERFORMING MAINTENANCE ON THE UNIT, READ AND UNDERSTAND THE SAFETY INFORMATION CONTAINED WITHIN THE SAFETY CHAPTER OF THE WINE GUARDIAN MANUAL.

DANGER

HIGH VOLTAGE - RISK OF SERIOUS INJURY OR DEATH

HIGH VOLTAGES ARE PRESENT IN THE CABINETS. TURN OFF ALL POWER. USE THE LOCKOUT/TAGOUT PROCEDURE BEFORE OPENING PANELS.

CAUTION

SHARP EDGES
RISK OF SEROUS INJURY
SHARP EDGES ARE PRESENT ON THE FAN WHEELS, HOUSING, FINS AND COILS.

NOTE: Maintenance on Wine Guardian units requires working with high voltage and sheet metal with possible sharp edges. Only qualified personnel should perform maintenance. Some tasks require knowledge of mechanical and electrical methods. Make sure you are familiar with all hazards, general safety related procedures, and safety labels on the unit.

CAUTION

EXPOSURE TO MICROBIAL GROWTH (MOLD) CAN CAUSE SERIOUS HEALTH PROBLEMS

NOTE: Standing water in drain pans promote microbial growth (mold) that cause unpleasant odors and serious health-related indoor air quality problems. If mold is found, remove it immediately and sanitize that portion of the unit.

The Wine Guardian is designed for minimum maintenance. The refrigerant system is hermetically sealed and requires no maintenance. The fans are permanently lubricated and require no maintenance. Some maintenance to the unit may be required due to dust or dirt in the air stream.

CAUTION
SHARP EDGES RISK OF SERIOUS INJURY
SHARP EDGES ARE PRESENT ON THE FINS AND COILS.

Cleaning the Condensate Drain System

The condensate drain system traps dust and dirt. Clean the drain system once a year.

1. Shut off the rocker switch and unplug the unit.
2. Remove the duct on the evaporator inlet.
3. Inspect the drain pan under the coil.
4. If drain pan appears soiled, pour some hot water mixed with liquid bleach (diluted solution) along the length of the pan to flush the dirt down the drain tube.
5. Continue this treatment until the drain appears clean and free of dirt.
6. Reinstall or duct collar.
7. Plug in the unit and restart.

Cleaning the Humidifier **(optional)**

If the unit was furnished with a humidifier it requires periodic maintenance. Follow the instructions in the humidifier guide.

Heating Coil Option

The heating coil is located between the evaporator coil and blower inside the transition duct. It contains the heating element and high temperature limit switches. The heating coil is wired to work in conjunction with the remote interface controller. Since the remote interface controller prevents the heating and cooling circuits from being energized at the same time, no additional power wiring is needed. We do recommend using the AUTO mode on the remote interface controller so it can switch from heating to cooling automatically. If using either the heat or cool only mode, the remote interface controller will **not** switch automatically.

No additional maintenance is required for the heating coil. To test the heating coil operation, set the remote interface controller on HEAT and set the temperature above the cellar temperature. The supply air temperature should rise above the return air temperature by an amount shown in the specifications.

Maintenance Schedule

Monthly

(or quarterly depending on experience with individual cellar)

- ✓ Check and drain trap – clean if needed.
- ✓ Check for noise or vibration.
- ✓ Check for short-cycling of the unit – a turning on and off of the compressor unit more than eight times/hour.

Yearly

(in addition to monthly)

- ✓ Check evaporator and condensing unit for dirt – use a vacuum with a brush attachment to clean the coils.
- ✓ Clean condensate pan under the evaporator coil by flushing. Be careful to keep the drain pans clear of any and all debris.
- ✓ Inspect cabinet for corrosion or rusting – clean and paint.
- ✓ Inspect for dirt buildup on or inside the unit. Clean unit by vacuuming or wiping it down.
- ✓ Check for loose insulation, fasteners, gaskets or connections.
- ✓ Check the wiring connections and integrity or cords.
- ✓ Examine ducts for any cracks or breach.
- ✓ Check fan and solenoid on humidifier.
- ✓ Replace humidifier pad (if used).

Troubleshooting

WARNING

BEFORE PROCEEDING, READ AND UNDERSTAND THE SAFETY INFORMATION CONTAINED IN THE SAFETY SECTION OF THE WINE GUARDIAN MANUAL.

IMPORTANT

This section is intended as a diagnostic aid only. For detailed repair or parts replacement procedures, contact a qualified service company. Check the following table for some solutions before calling a service technician.

Typical start up problems

Possible Cause	Solution
Loose, improper or defective remote interface controller or humidistat cable	Check power, and remote interface controller or humidistat cable
Incorrect remote interface controller or humidistat (optional) settings	Check the remote interface controller and optional humidistat setup for the application
Changed settings on the remote interface controller	A common problem is not waiting long enough for the internal timers to complete their timed delay

Unit does not start up

Power Switch Light is Off

Possible Cause	Solution
Switch not on No power to outlet Unit not plugged in	Turn on switch Check circuit breaker and wiring Plug in the unit

Power switch light is on and the remote interface controller light is off

Possible Cause	Solution
No power to remote interface controller	Check main control board for L.E.D. indication Check wiring for loose, broken or frayed connections Check wiring for proper splicing Remote interface controller may be faulty

Power switch light is on and the remote interface controller light is on

Possible Cause	Solution
Remote interface controller is not set up properly	Check remote interface controller set up in the guide Press fan ON switch to check evaporator fan only

Unit is operating and blows evaporator air, but the supply air is not colder than the return air from the cellar	
Possible Cause	**Solution**
Remote interface controller not set up properly	Check remote interface controller setup in the manufactures guide
Compressor not operating	High pressure switch open (button up) Alarm will appear on remote interface controller
Condenser airflow is blocked	Remove blockage Clean filter and coil (if needed) Head Pressure (HP) switch is open Reset HP switch **See reset instructions on pg. 60**

Cellar temperature too cold (below 51 degrees) when unit is running	
Possible Cause	**Solution**
Remote interface controller set too low on cooling	Reset remote interface controller to higher cooling temperature
Heating coil (optional) not operating	Check for remote interface controller rise across coil
Remote interface controller set too low on heating	Reset remote interface controller to higher heating temperature
Remote interface controller not controlling temperature	Remote interface controller mounted in improper location

Cellar temperature too cold (below 51 degrees) when unit is not running	
Possible Cause	**Solution**
Too much heat loss to adjacent spaces	Increase insulation around the ductwork Check and clean filter and coil Coil frozen – shut off unit for two hours
Cellar loads are too high	Install additional insulation

Humidity too low or supply air is too cold, without optional humidifier	
Possible Cause	**Solution**
Not enough evaporator airflow	Remove blockage in supply or return ductwork Check and clean filter and coil Coil frozen – shut off unit for two hours
Defective thermal expansion valve	If under warranty call for service If not under warranty call a refrigeration technician
Temperature set too cold	Raise temperature setpoint

Humidity too low, without optional humidifier	
Possible Cause	**Solution**
No moisture being added to cellar	Add Wine Guardian humidifier or a room humidifier

Humidity too low, with optional humidifier	
Possible Cause	**Solution**
Humidifier not operating	Check wiring for loose, broken or frayed connections Check humidistat set up Check for water flow and solenoid valve operation
Humidifier operating	Check for water being hot Check drip pad – replace if scaled No vapor barrier around cellar

Humidity too high when unit is running but not cooling	
Possible Cause	**Solution**
Compressor not operating	Check and reset high limit switch Clear blockage of condenser airflow
Ambient temperature is too high	Reduce temperature or draw condenser air from another space

Humidity too high when unit is not running	
Possible Cause	**Solution**
Unit needs to run to dehumidify	Run unit. Seal openings around doors (gasket and sweep)

Humidity too high when unit is running and cooling	
Possible Cause	**Solution**
Too much moisture in cellar	Poor vapor barrier installation Humidifier malfunction refer to the humidifier instructions Add dehumidifier to surrounding space

Unit operates but the power switch light is not ON	
Possible Cause	**Solution**
Bulb is burned out	Replace bulb

Unit is leaking water	
Possible Cause	**Solution**
Piping from unit to drain is trapped	Re-pipe to remove external traps
Trap plugged	Clean trap
Condensate pan plugged	Remove blockage and clean
Unit not level	Level with shims

Unit is running properly, but the sound of the unit objectionable	
Possible Cause	**Solution**
Noise is from airflow	Redirect airflow Add baffles Add insulated ductwork
Noise is from unit	Add sound baffle between unit and occupied

High Pressure Switch has Shut the Unit Down

Every Wine Guardian unit has a manual reset high pressure switch in the refrigeration system. This switch shuts the compressor and condenser down if the head pressure in the system is too high. It is intended to protect the compressor. Restricted airflow through the condenser is the most common reason for the pressure becoming too high. This can be caused by dust covering the filter or an obstruction blocking the airflow in the duct or grille.

Possible Cause	Solution
Head pressure in unit is too high because an obstruction is restricting air flow	Remove the obstruction at the condensing unit or clean the condenser coil. Then restart the unit after resetting the using the high pressure switch.

Instructions to Reset High Pressure Switch

1. Remove the top and side access panels at the condensing unit
2. Locate the high pressure switch near the compressor
3. Push in the reset button until it locks into position.
4. Re-install top and side access panels

Advanced Troubleshooting

IMPORTANT
This section is intended for qualified refrigeration service technicians only. The technician should repeat all of the previous troubleshooting steps before taking action on these more technical solutions.

Evaporator Coil is Freezing	
Possible Cause	**Solution**
Charge too low	Check sight glass Check for leaks Add refrigerant
TXV malfunctioning	Repair or replace

High pressure switch keeps tripping even after checking for obstructions and dirty filters/coils	
Possible Cause	**Solution**
Condenser fan not operating	Repair or replace
Defective switch	Replace

Unit cycles on and off more than 8 times/hr	
Possible Cause	**Solution**
Remote interface controller malfunction remote interface controller information	Check the remote interface controller guide for
Low suction pressure	Check low pressure switch Check pressure and adjust superheat

High pitched or loud rubbing noise, clanking or vibration	
Possible Cause	**Solution**
Fans loose or malfunctioning	Repair or replace
Excessive compressor vibration	Replace
TXV malfunctioning	Repair or replace

Replacing the blowers

When replacing the fan or motor, replace the fan and motor as a unit. Do not remove the motor from the impeller wheel.

Contact and Warranty Information

Contact Information

Wine Guardian
7000 Performance Drive
North Syracuse, NY 13212
Toll free: (800) 825-3268

Service Department: press 3
Direct: (315) 452-7420
Service Department: ext. 7434

Normal business hours are 8 a.m. to 5 p.m. Eastern, Monday-Friday.
After hours, contact: (315) 391-8747

Web site: www.airinnovations.com
Email: info@airinnovations.com

Warranty and Warranty Procedure

The Wine Guardian unit serial number is noted on all packing lists and bills of lading and, along with the shipping date, is kept on file at Wine Guardian for warranty purposes. **All correspondence regarding warranty must include the model number and serial number of the unit involved.** Note that the warranty is null and void if the serial number on the unit or compressor is altered, removed or defaced. All inquires or correspondence regarding warranty should be handled in accordance with the "Warranty" and directed to:

Wine Guardian
7000 Performance Drive
North Syracuse, New York 13212
Attn: Service Department
Toll Free: (800) 825-3268
Fax (315) 452-7420

This procedure includes but is not limited to:

- Obtaining authorization from Wine Guardian prior to incurring any charges for repair or replacement under warranty.
- Or returning prepaid within 30 days any and all defective parts.

Warranty

GENERAL

Wine Guardian warrants, to the original buyer, its goods and all parts thereof to be free from defects in material and workmanship for a period of two (2) years from the date of invoicing assuming **NORMAL USE AND SERVICE.**

LIABILITY

Wine Guardian liability shall be limited to the repair or replacement (at its option) of any part, which, at our sole discretion, is determined to be defective. The purchaser shall pay all transportation costs. Additionally, if a malfunction occurs within the first year from the date of invoice, **Wine Guardian** will reimburse the reasonable cost of labor required for the repair or replacement provided authorization is obtained from one of our authorized representatives prior to incurring any labor charges.

LIMITATIONS OF LIABILITY

THESE WARRANTIES ARE MADE IN LIEU OFF ALL OTHER WARRANTIES EXPRESSED OR IMPLIED, INCLUDING ANY IMPLIED WARRANTY OF MERCHANTABILITY OR FITNESS FOR A PARTICULAR PURPOSE AND IN LIEU OF ANY OTHER OBLIGATION OR LIABILITY, INCLUDING LIABILITY FOR ANY INCIDENTAL OR CONSQUENTIAL DAMAGES. **Wine Guardian** will not be responsible for any costs or liabilities whatsoever resulting from improper installation or service of its equipment. In the event that **Wine Guardian** or its distributors are found liable for damage based on any defect or nonconformity in the products, their total liability for each defective product shall not exceed the purchase price of such defective products. No person or representative is authorized to change these warranties or assume any other obligations or liabilities for **Wine Guardian** in connection with the sale of its systems.

INDEMNIFICATION

Purchaser agrees to indemnify, hold harmless and defend seller and its officers, directors, agents and employees from and against any and all claims, liabilities, costs and expenses arising out of or related to Purchaser's use of the goods, or in any way involving injury to person or property or accident occasioned by the goods sold by **Wine Guardian** to Purchaser.

FOREIGN GOVERNMENT AND INDIAN NATIONS

If Purchaser is a foreign government or an Indian nation, Purchaser hereby expressly waives its defense of sovereign immunity in the event of a dispute between Purchaser and **Wine Guardian** regarding this invoice and Purchaser expressly acquiesces to the jurisdiction of the federal and state courts of the United States.

SEVERABILITY

If one or more of the provisions contained in this contract shall for any reason be held to be invalid, illegal or unenforceable in any respect, such invalidity, illegality or unenforceability shall not affect any provision of this contract, but this contract shall be construed as if such invalid, illegal or unenforceable provision had never been contained.

ADDITONAL REQUIREMENTS

If a defect covered by the Warranty occurs, contact Wine Guardian for authorization to proceed with corrective action. Do not return any parts or incur any charges for which you expect to be reimbursed under this Warranty without receiving this authorization. If parts are replaced under this Warranty, the defective parts must be returned prepaid within 30 days. This warranty shall be null and void in its entirety if the Serial Number on the air conditioner or compressor is altered, removed or defaced.